INST.No. INE-851H

CHINO

AH4000 (Multi-point type)

Hybrid Memory Recorder

[General]

INSTRUCTIONS

CHINO

Table of contents

1. Introduction 1

2. For Safe Use 4

2-1. Preconditions for Use 4
2-2. Symbol Mark 4
2-3. Label 4
2-4. Important Explanation 5

3. Model Code List 6

4. Mounting and Wiring 7

4-1. External Dimensions 7
4-2. Mounting 7
4-3. Wiring 9

5. Part Names 28

5-1. Front Section of Internal Unit 28
5-2. Operation/Set Keys 29

6. Operation 30

6-1. Preparation for Operation 30
6-2. Basic Operation 32
6-3. Operation 36

7. Factory Default Settings 40

7-1. List of Factory Default Settings 40

8. Setting Method 41

8-1. Basic Rules 41
8-2. Input Type Settings “Range” 43
8-3. Alarm Settings “Alarm” 46
8-4. Calculation Settings “Calc” 53
8-5. Formula Settings “Formula” 57
8-6. Broken Line Approximation Table Settings “Seg.Tbl” 64
8-7. Chart Speed Settings “Chart” 65
8-8. Dot Printing Settings “Dot” 66
8-9. Subtract Printing Settings “Sub Prt” 67
8-10. Dot Printing Interval Settings “Dot.Int” 69
8-11. Periodic (Data Interval) Data Printing Settings “DataInt” 70
8-12. Periodic (Specified Time) Data Printing Settings “PrtTime” 71
8-13. List Printing Settings “ListPrt” 72
8-14. Message Printing 1 Settings “MsgPrt1” 73
8-15. Message Printing 2 Settings “MsgPrt2” 74
8-16. Recording Format Settings “PrtForm” 75
8-17. Auto Range Settings “A.Range” 76
8-18. Compressed/Expanded Printing Settings “Cmp&Exp” 78
8-19. Zone Printing Settings “ZonePrt” 80
8-20. SD Card “SD CARD” 82
8-21. USB Engineering Port Settings “USB” 89
8-22. Calendar Timer Settings “Timer” 90
8-23. Fail Output Settings “FailOut” 91
8-24. Display Settings “Display” 93
8-25. Measured Value Display Order Settings “D.Order” 94
8-26. Date and Time Settings “Date” 95
8-27. System Settings “System” 96
8-28. System Information Display “SysInfo” 97
8-29. Soft Dip Switch Settings “SoftDip” 98

9. Adjustment 101
9-1. Trace Printing (Dot Printing) Position Adjustment “Rec Adj” 101
9-2. Input Adjustment “Inp Adj” 102
9-3. Input Shift Adjustment 103
9-4. Wiring and Environment for Input Adjustment 104

10. Engineering Port (Mini-USB Terminal) 105

11. Troubleshooting 106
11-1. Problems and Remedies 106
11-2. Abnormal Measured Value 107

12. Inspection and Maintenance 108
12-1. Routine Inspection 108
12-2. Consumable Parts and Replacement Guideline 108
12-3. The battery removal method for the purpose of disposal 109

13. Option 111
13-1. External Operation Settings “Dig Inp” 111
13-2. Operation Recording Settings “Ope.Rec” 114
13-3. COM Port Settings “COM1” and “COM2” 115
13-4. IP Address etc… Settings “Ether” 116
13-5. SNTP Settings “SNTP” 117
13-6. E-mail Settings “E-mail” 118
13-7. Low Order Communication 121
13-8. SD Card Playback “SDtoPrt” 131

14. Specifications 136

1. Introduction

Thank you for purchasing AH4000 sesries (Multi-point Type) with 180mm recording width.
This industrial use instrument records input signals to the chart paper and stores data into the SD card.
Mount this instrument on the indoor instrumentation panel etc. and record signals of temperature sensor, pressure gauge, hygrometer and flow meter. Reading signals of the recorder are thermocouple, resistance thermometer, DCmV and DCV.
Make sure to read this instruction manual in advance to understand this unit well and prevent troubles from occurring. This manual is a “General” Instruction manual. For specifications with communications, read the “Communications” instruction manual separately.

Request

- To the persons doing instrumentation, installation, and sales -

Make sure to provide this instruction manual to the person who uses the unit.

- To the users of this unit -

Store this instruction manual with care until you scrap the unit.
Also, write down the parameter contents set in the product and keep it for your record.

Product warranty scope

This product is warranted for one year from the date of delivery. If it is damaged during the warranty period, when used normally based on the cautions in the instruction manual, labels, and markings attached to the product, etc., it will be repaired without any charge (only in Japan). In the case, we are sorry to trouble you, but please contact your dealer or nearest our sales office.
However, in cases of the followings, it will be repaired at your expense even during warranty period.

1. Failure or damage caused by improper use or connection, or invalid repair or modification.
2. Failure or damage caused by fire, earthquake, wind or flood, thunderbolt, or other extraordinary natural phenomena, or pollution, salt, harmful gas, abnormal voltage, or use of unspecified power.
3. Replacement of parts or accessories that have reached the end of their life.

Furthermore, the term ‘warranty’ in this sense covers only a CHINO’s product itself. Therefore, we are not responsible for compensation for whatever the damage that is triggered by failure of our product.

Notice

1. No part of this manual can be reproduced or copied in any form without permission.
2. The contents of this manual may be altered without prior notice.
3. This manual has been documented by making assurance doubly sure. However, if any question arises or if any error, an omission, or other deficiencies are found, please contact your nearest our sales office.
4. CHINO is not responsible for any operation results of this software.

Trademark

1. Microsoft, Windows, Windows XP, Windows Vista, Windows 7, and NET Framework are trademarks of Microsoft Corporation and the related company.
2. SD Memory Card is the trademark of Panasonic Corporation, SanDisk Corporation in USA, and TOSHIBA CORPORATION.
3. Other described company names and product names are trademarks and registered products of the respective companies.
4. Please note that the marks “TM” and “®” are omitted throughout this manual.

Warning

Perchlorate Material

This instrument uses battery with Perchlorate Material.
Special handling may apply, see
http://www. dtsc.ca.gov/hazardouswaste/perchiorate

■ Before use

Make sure to check the following before use after unpacking the unit. If you have any question, please contact your dealer or our nearest office.

1. Exterior check

Check that the appearance of the product has no damage.

2. Model code check

Check that the model code of the purchased product is correct.

◆ Model code label and application place
The label as follows is attached on the upper surface of the product case and the chassis.

AH47 □□-□□□-□□□	← Model code
R 4□□□□□□□□□□□	← Serial number
MADE IN JAPAN	

3. Accessories check

Check the following accessories attached to the product.

Item	Q'ty	Remarks
Instruction manual	1	CD-R
Instruction manual [Wiring/Installation]	1	Booklet
Bracket	2 (1 set)	For panel mounting, CG1-31039
Fixing screw	2	For panel mounting, CG1-21062
Open-end Wrench	1	CG1-31072
Terminal screw	5	M3.5, for input terminal (spares for missing)
Chart paper	1	The type depends on the specifications.
Ribbon cassette	1	84-0055

In addition, if accessories are purchased additionally, those products may be attached.

Request

1. Do not drop the product while take it out of the box
2. When transporting the unit, pack in the dedicated package box, and put the box in an outer case with a bed of cushion.
   With the consideration to the case above, it is recommended that the dedicated package box for the unit is stored.
3. When the unit is removed from the panel and not used for a long time, put it in the dedicated package box, and store it in a place with normal ambient temperature and less dust.

4. About attached chart paper

For the unit, the chart paper No.EH01001 (0 to 100 equal divisions) is available and delivered. For the case that the chart paper is to be specified, various scales are available as follows.

Chart Paper for Standard Scale

Standard scale (linear)	Chart paper No.
0 to 50°C	EH05045
0 to 100°C	EH05001
0 to 150°C	EH05044
0 to 200°C	EH05043
0 to 250°C	EH05042
0 to 300°C	EH05041
0 to 400°C	EH05040
0 to 500°C	EH05039
100 to 250°C	EH05049
-20 to 80°C	EH05056
-40 to 80°C	EH05055
-50 to 150°C	EH05052
-50 to 100°C	EH05053
-50 to 50°C	EH05054
-100 to 50°C	EH05051
-100 to 200°C	EH05065
-50 to 200°C	EH05064
50 to 100°C	EH05050
0 to 600°C	EH05038
0 to 800°C	EH05037

Standard scale (linear)	Chart paper No.
0 to 1000°C	EH05036
0 to 1200°C	EH05035
0 to 1400°C	EH05031
0 to 1600°C	EH05034
0 to 1800°C	EH05030
400 to 1600°C	EH05048
0 to 5mV	EH01001 (0 to 100 equal divisions)
0 to 10mV	
0 to 20mV	
0 to 50mV	
-5 to 5mV	
-10 to 10mV	
1 to 5V	
4 to 20mA	
10 to 50mA	
Double to sextuple scale	
Non-standard scale	

* The chart paper has the same printed linear scale as the standard scale.
Therefore, it can be shared in regardless of input types (thermocouple, resistance thermometer, or others).

* When using recording paper except for genuine chart, operation is not guaranteed.

5. Restriction of digital recording/printing function

(1) The time necessary for data printing depends on the points of measuring input. Note that when data printing is executed, the trace printing stops until the printing is finished.

Input points	Necessary time for data printing
6 points	About 1 minutes 20 seconds
12 points	About 2 minutes 20 seconds
24 points	About 5 minutes

(2) When the chart speed is set to 251mm/H or more, power-on printing, data printing, list printing, and printing function for other than time line are disabled.

(3) The trace printing executes dot printing with five seconds interval (standard); however, if time printing is executed during the trace printing, the dot interval may become longer. The dot interval is extended with the inserted printing. Therefore, this is not abnormal.

(4) Printing is formed with dots of one pin. Therefore, if the power is turned off while characters are being formed, they cannot be formed correctly. This is not abnormal.

2. For Safe Use

If the unit is used in a manner not specified by manufacturer, the protection provided by the unit may be impaired.
For safe use of the unit, please read and understand the following cautions.

2-1. Preconditions for Use

The unit is a component type general product to be used mounted on an indoor instrumentation panel. Avoid using under other conditions.
Use after the system safety is implemented such as the fail-safe design and periodical inspection on the final product side.
Also, for wiring/adjustment/operation of the unit, ask professionals with instrumentation knowledge to perform.
Furthermore, also the person who actually uses the unit is required to read this instruction manual to fully understand various cautions and basic operation.

2-2. Symbol Mark

This instruction manual includes the following symbol marks. Make sure to fully understand the meaning of them.

Symbol mark	Meaning
⚠ **Warning**	Cautions are explained to avoid causes for death or serious injuries of users.
⚠ **Caution**	Cautions are explained to avoid causes for slight injuries of users or damages of the unit or peripheral devices.

2-3. Label

For safe use of the unit, the following labels are used.

Label	”Name” and place	Meaning
⚠	“Alert symbol mark” Various terminals (back side)	Indicates the location which should refer to the manual in order to prevent an electric shock and injury.
⏚	“Protective conductor terminal” Right side of power terminal (back side)	Terminal to be grounded to avoid electric shock
100 to 240V AC 50/60Hz, 65VA	“Power source specification” Power conductor terminals	Specification of power (voltage range, frequency, and power consumption) used for the unit

2-4. Important Explanation

Warning To avoid severe accidents, make sure to read and understand the following.

1. Switch and overcurrent protection device

This unit is not provided with a replaceable overcurrent protective device. Prepare a switch and an overcurrent protective device for the power supply (circuit breakers, circuit protectors or the like) within 3m of this unit in a location where the operator can access easily. Use a switch and an overcurrent protective device conforming to IEC947-1 and IEC947-3.

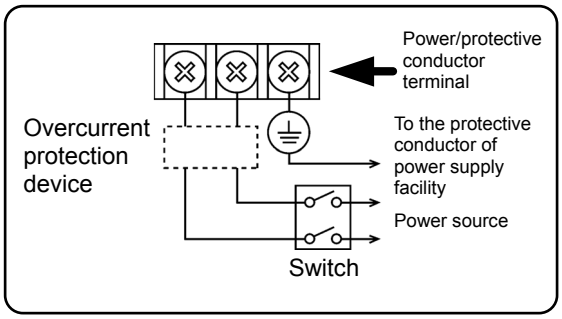

2. Be sure to ground this instrument

To avoid electric shock, before turning the power on, connect the protective conductor terminal of this recorder to the protective conductor of the power supply equipment, and do not remove it during use.

Reference **Fuse in power unit**

For safety, the fuse below is included in the power unit of the unit. It cannot be replaced.

Manufacturer:Daito Communication Apparatus Co.,Ltd
Model: SBL32

3. Before turning on the power supply

For safety, first check that the power source is within the range indicated on the power label, and then turn on the external power switch.

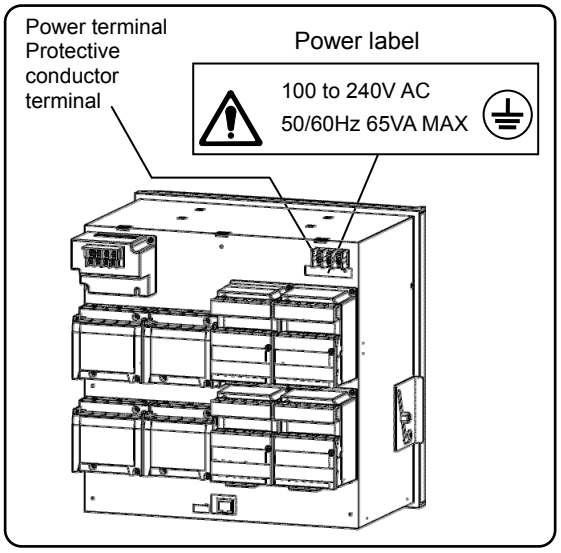

4. Avoid repair and modification

Avoid repair and modification with parts replacement by persons other than service personnel authorized by CHINO. Not only damage or malfunction of this recorder may occur, but also dangers such as electric shock may occur. In addition, the inner unit does not have to be pulled out in the normal use.

5. Use the unit following the instruction manual

For safe use, use the unit following the instruction manual. Please note that CHINO does not have any responsibilities for any claims for failures or damages occurred with abuse or misuse of this recorder.

6. Installing the safety device

Regarding the use of a device that anticipates a big loss due to failure of the controller and the peripheral device, always install a safety device for preventing these losses and implement fail safe design in the final product.
Do not use it in important in facilities like, human life,atomic energy, aviation and space.

7. Turn off the power supply if abnormality occurs

Turn off the power supply immediately and contact your local CHINO's sales office if any abnormal odor, noise or any smoke occurs, or if this unit becomes high temperature that is too hot to be touched.

8. Do not put hands in this product

Do not put your hands or tools inside of this product. It may cause electric shock or injuries.
There is no operation such as pulling out an inner unit or using tools when using this product.

9. Do not look at light directly

Do not look at the chart illumination directly.

3. Model Code List

AH47□□-□□□-□□□

Input point
06: 6 dots
12: 12 dots
24: 24 dots

Communications
N: None
E: Ethernet
R: RS232C
A: RS422A/RS485
Q: RS232C + RS485
C: RS422A/RS485 + RS485
G: Ethernet + RS422A/RS485 + RS485
F: Ethernet + RS422A/RS485 + RS485 + Low-order communications

Alarm output + remote contacts
0: None
2: 2 mechanical relay 'a' contact alarm outputs
4: 4 mechanical relay 'c' contact alarm outputs + 5 remote contacts
A: 6 mechanical relay 'a' contact alarm outputs + 5 remote contacts
8: 8 mechanical relay 'c' contact alarm outputs + 10 remote contacts
B: 12 mechanical relay 'a' contact alarm outputs + 10 remote contacts
F: 16 mechanical relay 'c' contact alarm outputs + 20 remote contacts
D: 24 mechanical relay 'a' contact alarm outputs + 20 remote contacts

Power
A: 100 to 240V AC

For OP/SP
NNN: None
NNP: SD card playback

4. Mounting and Wiring

4-1. External Dimensions

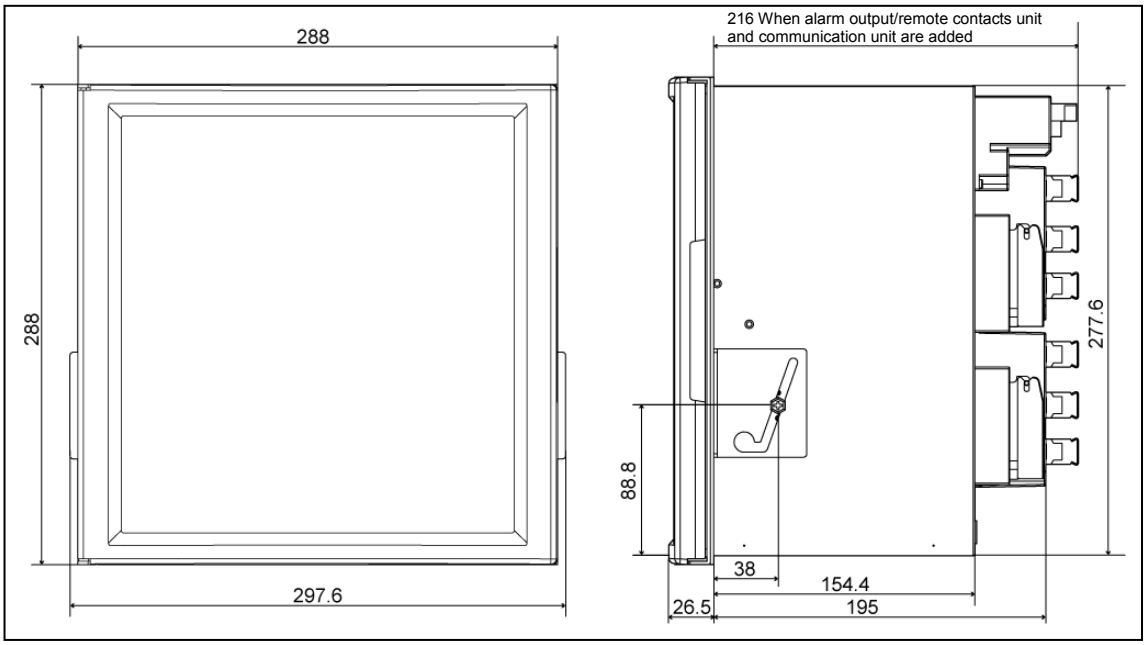

Unit: mm

4-2. Mounting

⚠ **Caution**	(1) Use the recorder mounting on an indoor installed instrumentation panel. (2) Brackets can be attached to a panel of steel with thickness of 2 to 6mm or equivalent strength. Select thickness of a panel considering weight and depth of the unit with panel formation for actual use. (3) When mounting the recorder on the panel, mount it according to the instruction manual for preventing injury.

1. Panel cutout and mounting method

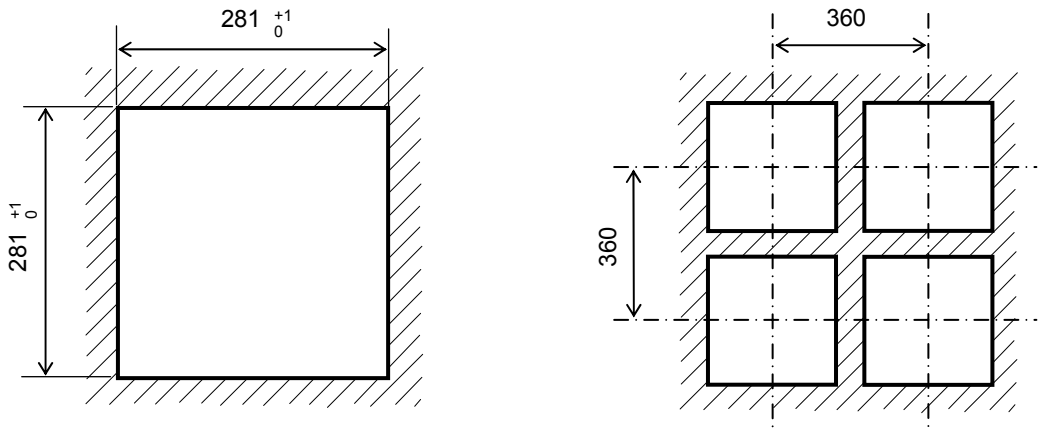

Unit: mm

(1) Insert the unit into the panel cutout from the front of the panel.
(2) Screw lightly two provided mounting screws into the screw holes on left/right side (two locations in total) of the recorder.
(3) Insert the hexagon heads of screws installed above into the round holes of brackets, (from the front) sliding them as shown in the figure, press it firmly against the panel, and tighten them with the provided wrench or a Phillips-head screwdriver. In addition, the tightening torque of the screw is 2Nm (for use of a Phillips-head screwdriver).

* Note that the left bracket differs from the right one (Mounting must be performed by two persons).

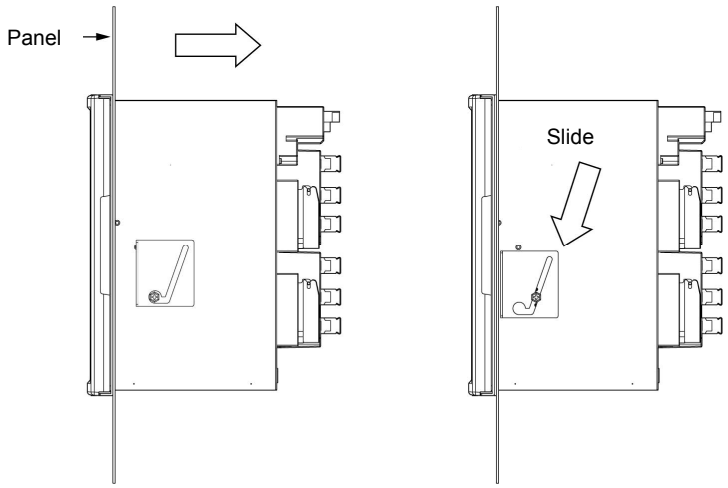

2. Mounting condition

Caution	To avoid accidents, make sure to read and understand the following.

Industrial environment

Select a location distant from sources of electric field or magnetic field and without mechanical vibration or shock.

- Overvoltage category.....II (EN standard)
- Pollution degree.....2 (EN standard)
- Short-term temporary overvoltage 1440V
- Altitude ..... 2000m or less
- Working place ..... Indoor
- Long-term temporary overvoltage 490V

Normal operating condition

- Ambient temperature ·· 0 to 50℃(20 to 65%RH,non-condensing)
- Ambient humidity ····· 20 to 80%RH,non-condensing(5 to 45℃)
- Power voltage ····· General specification : 100 to 240V AC ±10%
- Power frequency ····· General specification : 50/60Hz ±2%

Atmosphere

- For safety, avoid a location with corrosive gas, explosive gas, flammable gas and combustible gas.
- Avoid a location with dust, smoke, or steam.

Mounting angle

- Lateral tilting ····· 0 to 10°
- Longitudinal tilting ····· Forward tilting: 0°Backward tilting: 0 to 30°
- View angle ····· -10 to +30°with the horizon as the standard

Angles other than the above affect the recording operation.

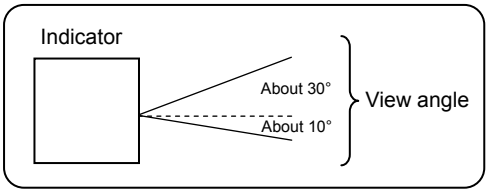

4-3. Wiring

1. Terminal board diagram

The figure below is the diagram of the terminal board with the option [Alarm relay output (24 points ‘a‘ contact) + remote contacts (20 points) and communication interface].

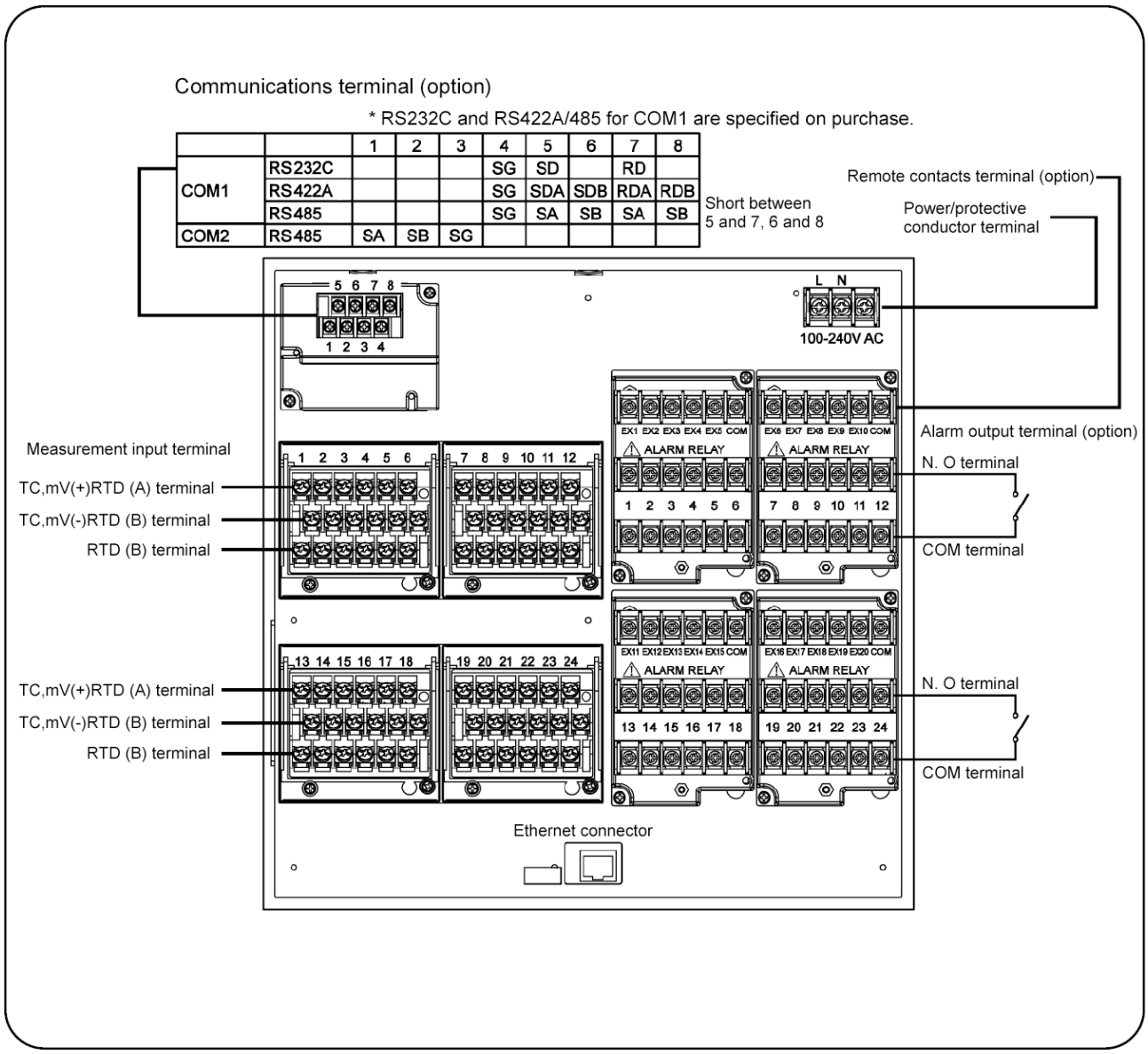

		1	2	3	4	5	6	7	8
COM1	RS232C				SG	SD		RD	
	RS422A				SG	SDA	SDB	RDA	RDB
	RS485				SG	SA	SB	SA	SB
COM2	RS485	SA	SB	SG					

The figure below is the diagram of the terminal board with the option [Alarm relay output (16 points ‘c‘ contact) + remote contacts (20 points) and communication interface].

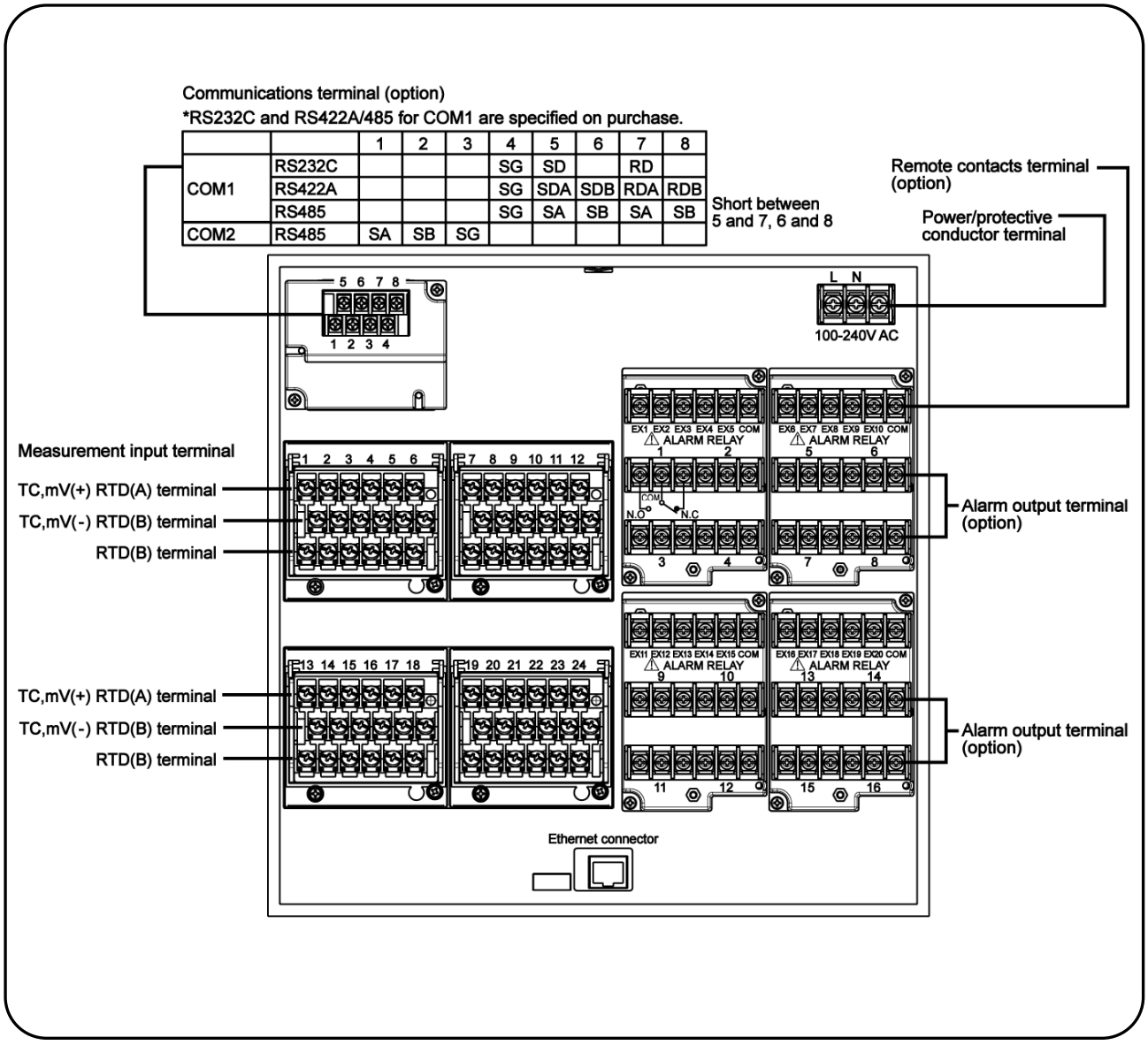

		1	2	3	4	5	6	7	8
COM1	RS232C				SG	SD		RD	
	RS422A				SG	SDA	SDB	RDA	RDB
	RS485				SG	SA	SB	SA	SB
COM2	RS485	SA	SB	SG					

The figure below is the diagram of the terminal board with the option [Alarm relay output (2 points ‘a ‘ contact) and communication interface].

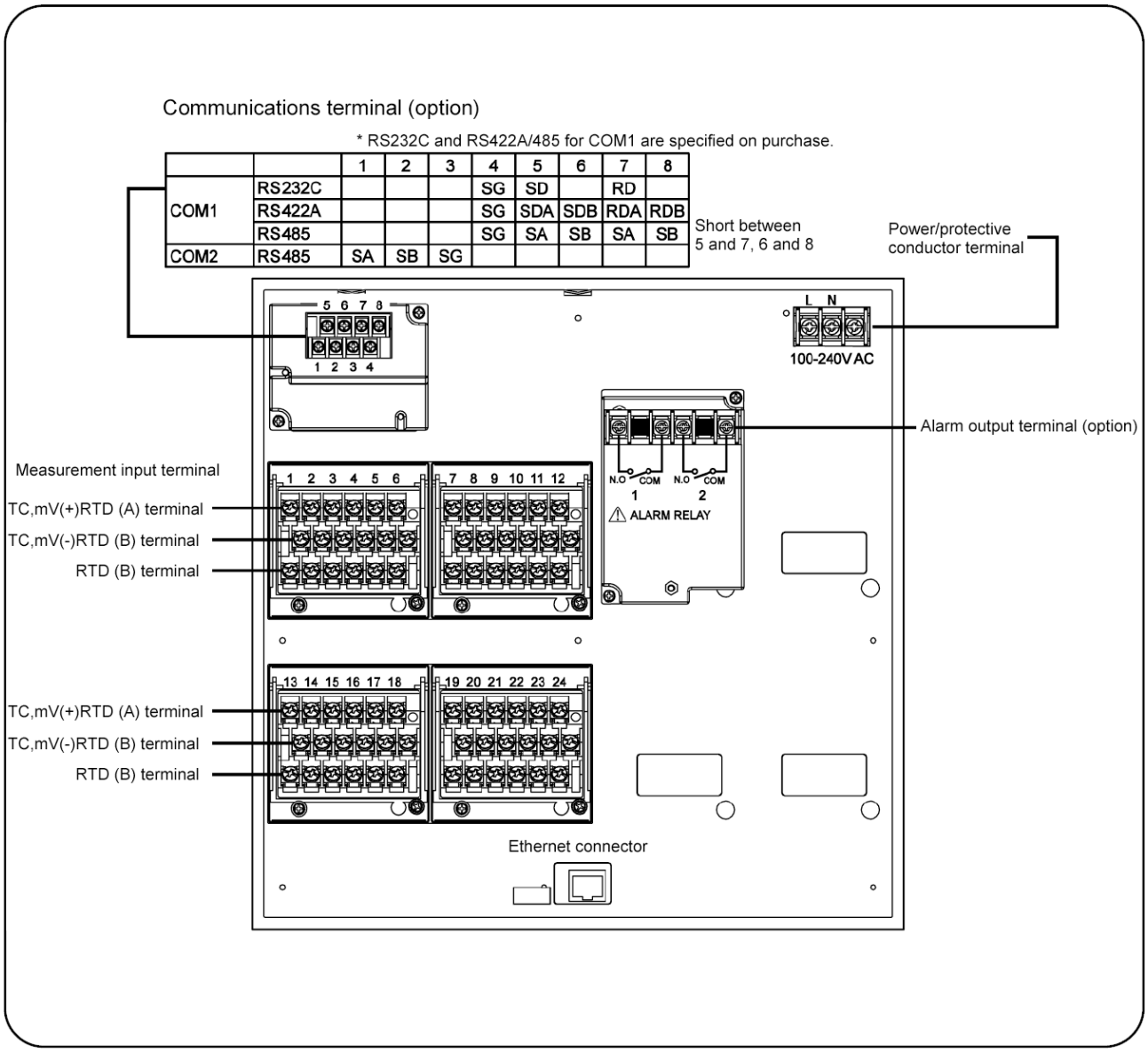

		1	2	3	4	5	6	7	8
COM1	RS232C				SG	SD		RD	
	RS422A				SG	SDA	SDB	RDA	RDB
	RS485				SG	SA	SB	SA	SB
COM2	RS485	SA	SB	SG					

Warning

■ Alert symbol mark (⚠) and location

⚠ mark is attached to the location to which if human body touches, an electric shock may be generated.

Terminal name	Location of attached mark
Power terminal	Lower left of power terminal
Measurement input terminal	Upper left of terminal cover
Mechanical relay ‘c’ contact alarm terminal	Upper left of terminal cover
Mechanical relay ‘a’ contact alarm terminal	Lower left of N.O terminal

Reference **Input terminal block and alarm terminal block are removable.**

For easy wiring, the input unit, alarm output/remote contacts unit, and communication unit are removable.

(1) Every unit can be removed when two mouting screws are removed.

(2) The recorder and each unit are connected with a connector.

[Input unit]

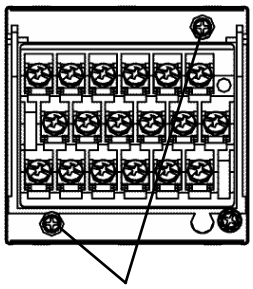

Mounting screws

[Alarm output/remote contacts unit]

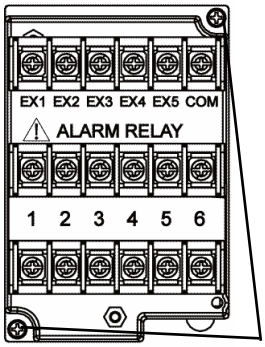

Mounting screws

[Communications unit]

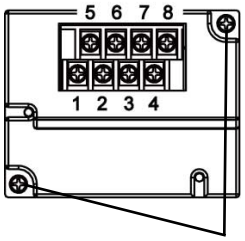

Mounting screws

Warning

■ **Turn off the power and then remove/attach**

Make sure to turn off the external power switch before units are removed/attached to prevent damages on electric circuits.

Note **Thermocouple input unit replacement**

Only thermocouple input unit cannot be replaced with other instrument unit. If done so, measurement errors are generated.

2. Precautions on wiring

Precautions on wiring are described below. Observe them to maintain safety and reliability.

1) Feed power source
For the power source for the unit, use the single-phase power source with stable voltage and without waveform strain to prevent malfunctions.

⚠ **Warning**	(1) Switch and overcurrent protective device Add a switch and overcurrent protective device (250V,3A) to the feed power source to prevent an electric shock on wiring. The unit has no replaceable fuse. (2) Connect after the power source is turned OFF When performing power and input/output wiring, make sure to turn OFF the feed power source to prevent an electric shock.

2) Separate from strong power circuits
For input/output wiring, avoid adjacency or parallel with strong power circuits such as power lines. Separate 50cm or more for adjacency or parallel.

3) Separate thermocouple input from heat sources.
To reduce reference junction compensation errors for thermocouple input, especially separate terminals from heat sources (heating body). Also, avoid radiation such as direct sunlight.

4) Separate from noise sources.
Separate from noise sources as much as possible. Unexpected troubles may occur. If separation from noise sources is disabled, implement countermeasures.

Main source	Countermeasures
• Electromagnetic switch or others • Power line with distortion of wave • Inverter • Thyristor regulator	Insert noise filters between power source and input/output terminals. CR filters are used in many cases.

5) Use crimping terminals.
   (1) To prevent looseness or disconnection of terminals and short circuit between terminals, install crimping terminals to termination of connection cables.
   (2) To prevent an electric shock, use crimping terminals with insulation sleeves.

Terminal Type and Termination Treatment

Terminal board	Diameter	Tightening torque	Termination treatment (Unit: mm)
Power/Protective conductor	M4	1.2Nm	O type 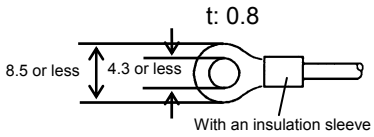
Terminals other than the above	M3.5	0.8Nm	O type 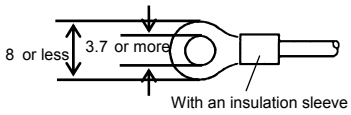 Y type 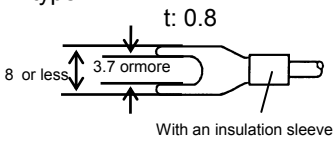 * Be sure to use O type for the alarm output terminals. * For other terminals, use also O type as possible.
Communications terminal	M3	0.5Nm	O type 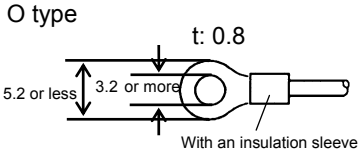 Y type 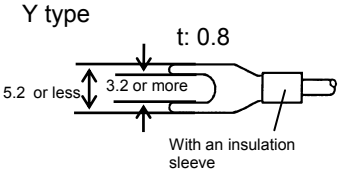 * Use O type as possible.

6) Unused terminals
   Avoid using unused terminals for relaying. Electric circuits may be damaged.

⚠ **Warning**	■ **Treat properly the wired cables.** Treat surely wired cables not to get hung up on people and things. Disconnection of wiring with hanging up may cause an electric shock.

3. Power/protective conductor terminals wiring

1) Power/protective conductor terminals

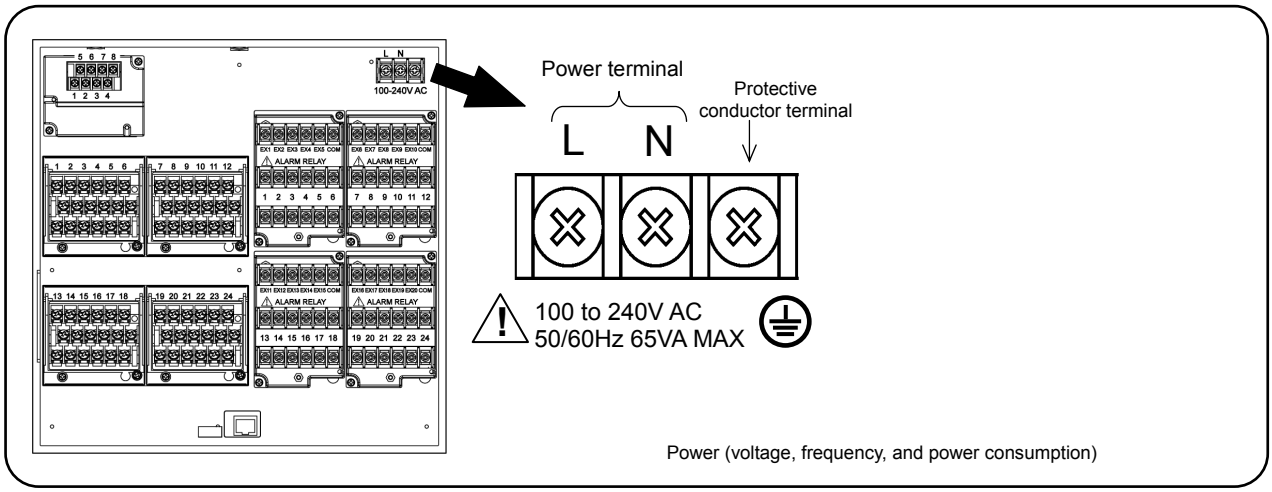

Warning	■ **Turn OFF feed power source.** Before power/protective conductor terminals wiring, make sure to turn off the feed power source to prevent an electric shock.

2) Power terminal wiring
Using 600V vinyl insulated cables (AWG20 to 16) as the power line, install crimping terminals with insulation sleeves to the termination for wiring.
Note: Use the following standard cables.
(1) IEC 60227-3
(2) ANSI/UL817
(3) CSA C22.2 No.21/49

Note **L/N display of power terminal**

Display based on CSA standard in Canada. The live side of single-phase AC power supply is L, and the neutral side is N display. To get sufficient performance, observe the L/N wiring.

3) Protective conductor terminal wiring
Make sure to connect to the protective conductor of the power equipment. Install crimping terminals with insulation sleeves for wiring.
- Grounding wire: Copper cable with AWG20 to 16 (green/yellow)

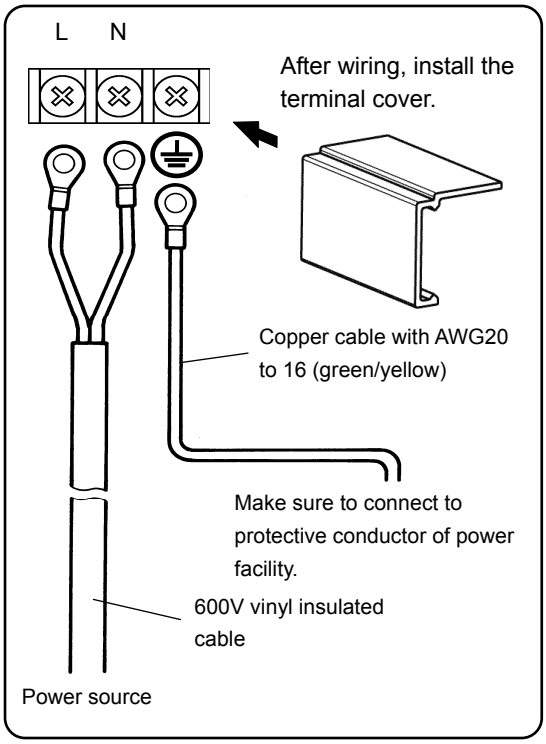

Caution	■ ⚠ **mark at power terminals** After wiring the power terminals have power supply voltage applied.Make sure to install power terminal covers after wiring to prevent an electric shock.

Warning	■ **Pay attention to power supply voltage and noise.** The power supply voltage of the unit is indicated on power terminals. Applying power other than the indicated one causes accidents or malfunction. In addition, if the power has noise interference, implement countermeasures such as noise cut transformer installation.

4) Measurement input terminals wiring

1) Measurement input terminal
Turn OFF the feed power source before wiring to prevent an electric shock.
Install crimping terminals with insulation sleeves to input terminals for wiring.

⚠ Caution

■ Allowable input voltage

Input type	Allowable input voltage
Voltage, thermocouple input	±10VDC *
Resistance thermometer input	±6VDC

*±60VDC for channels specified with ±10V range or more
Rated including maximum transient overvoltage: ±60VDC

2) DC voltage (current) input wiring
Use instrumentation twisted cables for measures against noise as input cables.
For current input, connect the shunt resistor for current input to the channel to be measured before wiring.

Note **Measurement input terminal insulation**

TC,mV(+) and RTD(A) terminals and TC,mV(-) and RTD (B "middle") terminals are insulated for each channel, and RTD (B"lower") terminal shorts internally between channels.

● DC voltage (current) input ⚠

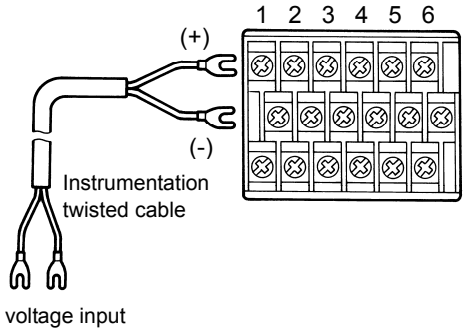

3) Thermocouple (TC) input wiring
Make sure to wire thermocouple cable (or compensation lead wire) to input terminals of the unit.
If a copper conductive wire is connected halfway, big measurement error will be generated.
In addition, avoid parallel connection of a pair of thermocouple wires with other instruments (controller or others) that causes troubles.

● Thermocouple (TC) input ⚠

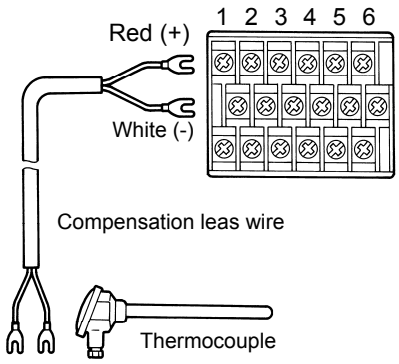

4) Resistance thermometer (RTD) input wiring
To prevent measurement errors, use 3-core cables as the input cable in which lines have the same resistance.
In addition, one resistance thermometer cannot be connected in parallel with other instruments (a controller or others).

● Resistance thermometer (RTD) input ⚠

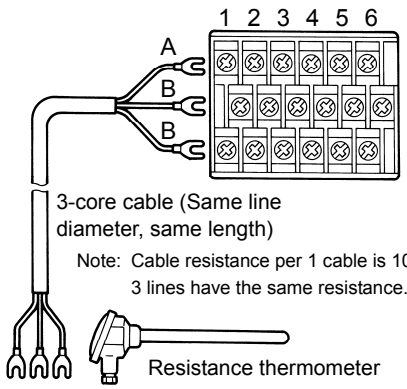

⚠ Warning

■ ⚠ **mark on measurement input terminals**
High voltage may be applied to the measurement input terminals due to common mode noise. Allowable noise value is 30VAC or 60VDC or less. Check that the voltage is equal to or less than the allowable value. Do not use the instrument for measurements on mains circuits. Install terminal covers after wiring to prevent an electric shock and protect input cables. For thermocouple input, installing terminal covers reduces reference junction compensation errors.

5) Input unit terminal cover mounting/removing
   (1) Raise the cover to the direction of the arrow.
   (2) Turn to the direction of the arrow.
   (3) Pull ito the direction of the arrow to remove.

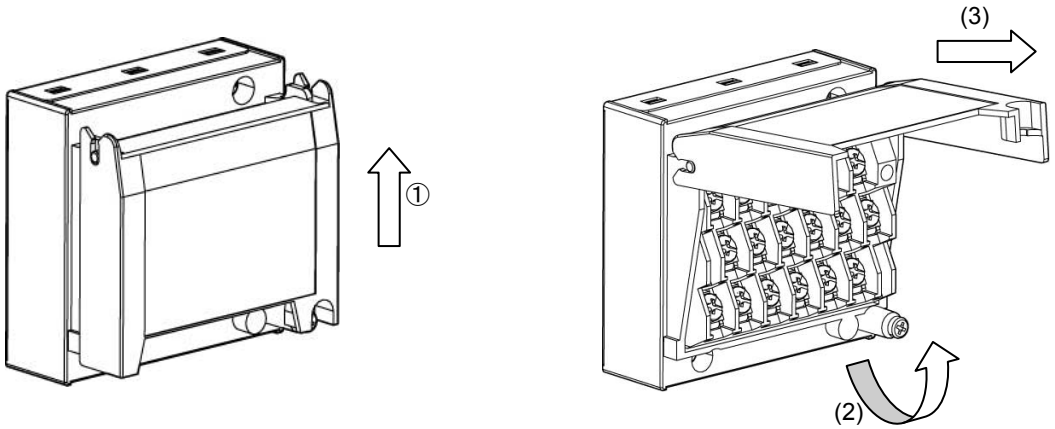

5. Alarm output terminals wiring (option)

1) Alarm output terminals
   The terminal configuration depends on the output specification.

Alarm relay output 6 points (‘a’ contact)

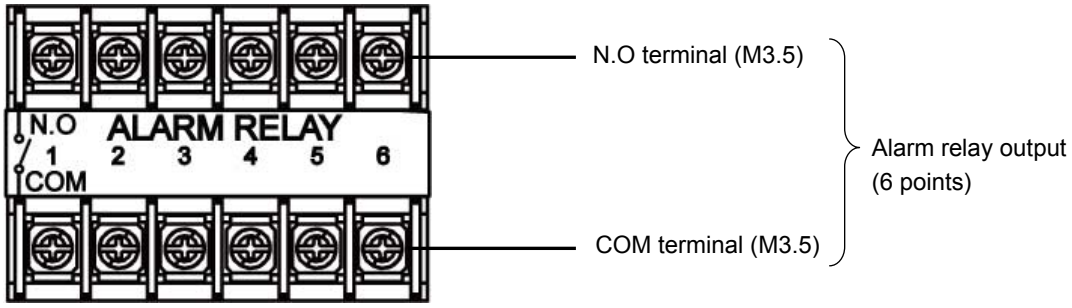

Alarm relay output 4 points (‘c’ contact)

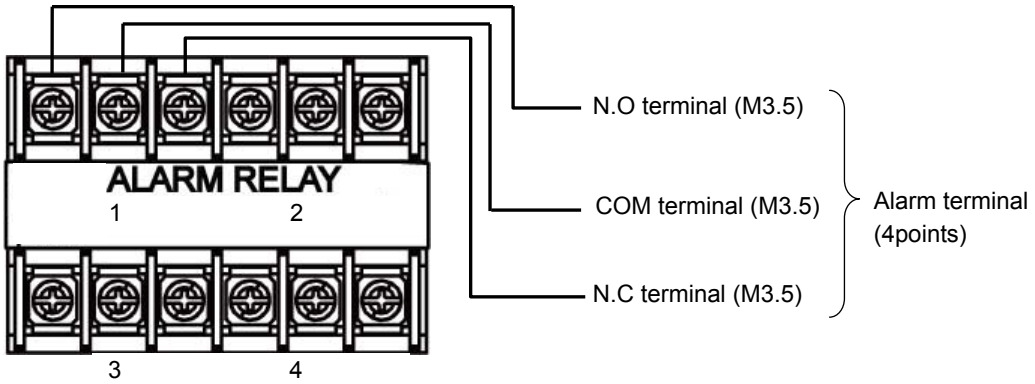

Alarm relay output 2 points (‘a’ contact)

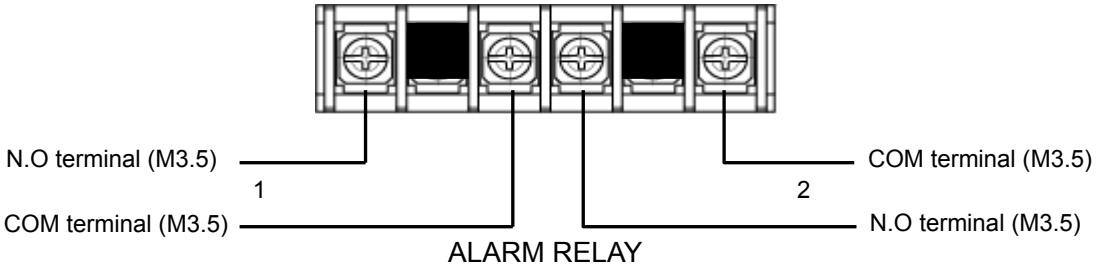

2) Wiring

Turn OFF the feed power source and the power source for buffer relay before wiring to prevent an electric shock. Use the cable of AWG20 to 16.

(1) Wire the cable to the load via the buffer relay.

(2) To the alarm output terminals, type O crimp style terminal with insulation sleeve which is connected to double insulated signal wire should be connected. (Refer to 4-3. Wiring, 2. Precautions on wiring.)

Mechanical relay 'a' contact output example	Mechanical relay 'c' contact output example
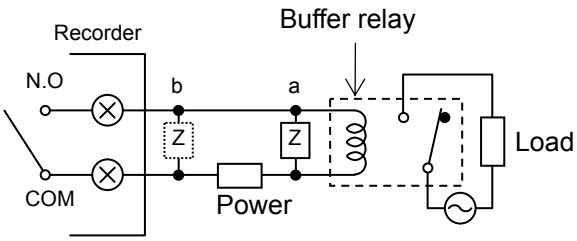 Z: Contact protective element (Attachment to a side is desirable.)	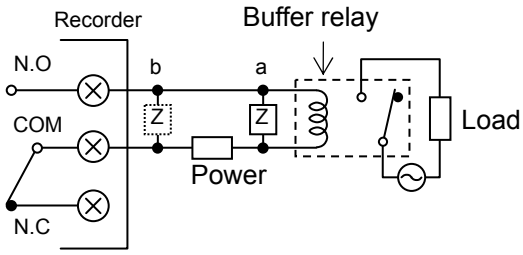 Z: Contact protective element (Attachment to a side is desirable.) * N.C terminal is opened on alarm occurrence in opposite way to N.O terminal.

Warning

■ ⚠ **mark on alarm output terminals**

Maximum of 240VAC can be connected to the alarm output terminals of this unit.

Basic insulation (dielectric strength 1500V AC) is carried out between the alarm output channels, however, from the malfunction etc. 240VAC may be output to each alarm output terminals. Double insulation or reinforced insulation to the outside circuit connected to an alarm output terminal should be set and industrial environment should be overvoltage category Ⅰ.

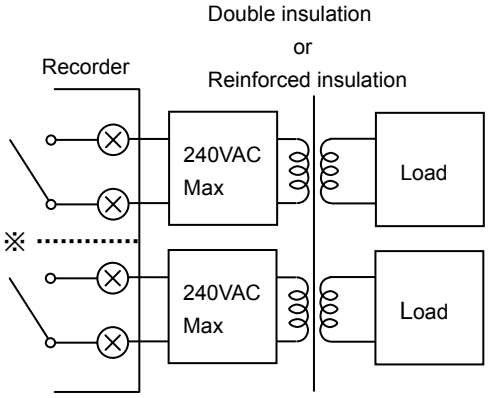

※Basic insulation between output channels

A buffer relay power supply is applied to the alarm output terminals after connections and so creates a risk of electric shock if touched. Terminal cover must be mounted after connection. Moreover, safety measures to the outside circuit should be set.

Caution

■ **Implement safety measures.**

The alarm output of the unit may generate output failure with wrong operation, failure, abnormal input, or others. Double insulation or reinforced insulation in outside circuit side of all the channels should be set in any system for safety ensuring.

3) Precautions on wiring

The following are precautions on wiring.

<table>
<tr><th>Item</th><th>Description</th></tr>
<tr><td>Mechanical relay output specification contact capacity
(Common to ‘a’ contact and ‘c’ contact)</td><td>
<table>
<tr><th>Power supply</th><th>Resistance load</th><th>Inductive load</th></tr>
<tr><td>100VAC</td><td>2A</td><td>1A</td></tr>
<tr><td>240VAC</td><td>2A</td><td>1A</td></tr>
<tr><td>30VDC</td><td>2A</td><td>1A</td></tr>
</table>
(Minimum load)
100μA100mVDC</td></tr>
<tr><td>Contact protective element Z installation</td><td>● Install the contact protective element which fits the buffer relay.
● It is effective to install the element to the coil side of the buffer relay (see the figure of mechanical relay ‘a’ contact output example) and prevents wrong operation with light load.</td></tr>
<tr><td>Selection of buffer relay</td><td>● Coil rating: Contact capacity or less of output terminals
● Contact rating: Double of load current or more
In addition, the coil surge absorption element built-in type relay is recommended. If there is no buffer relay which meets the load rating, implement another stage of buffer relay.</td></tr>
<tr><td>Selection of contact protective element</td><td>If there is no surge absorption element built-in buffer relay, install this element.
The element of C/R (capacitor + resistor) is general.
<C/R standard> C: 0.01μF (Rating about1kv)
R: 100 to 150Ω (Rating about 1W)</td></tr>
</table>

6. Remote contacts terminals wiring and operation selection (option)

Only with remote contacts terminals (option).

1) Remote contacts terminals

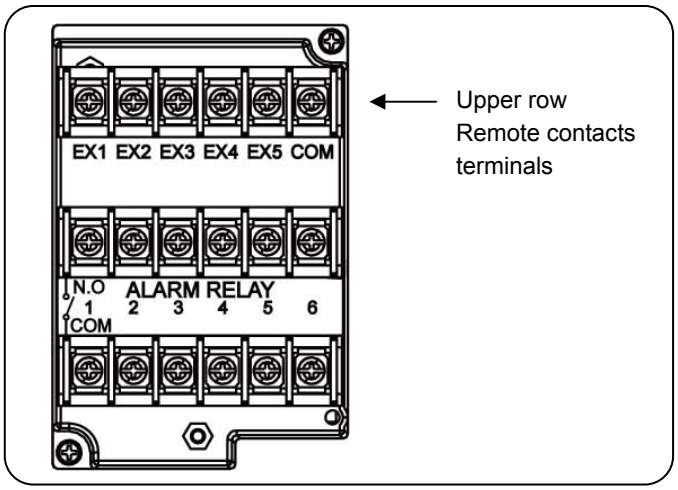

Note **Characteristics of contact input terminals**

- Voltage on contact open: About 5V
- Current on contact short: About10mA

2) Wiring

Turn OFF the feed power source before wiring to prevent an electric shock.

(1) Use no voltage contact signals to be given to the remote contacts terminals.

(2) Install crimping terminals with insulation sleeves to remote contacts terminals for wiring.

■ Wiring example

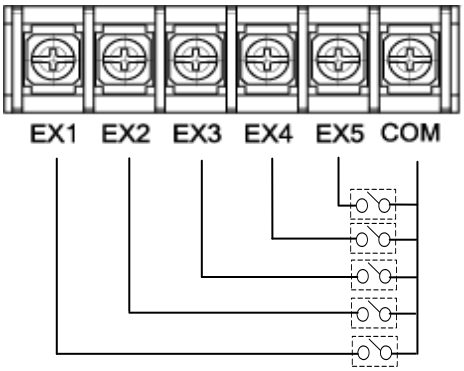

Warning	■ **No voltage contact** For contacts connected to the remote contacts terminals, be able to connect only the circuit of secondary side which is reinforced from primary side or treated double insulation. Use switches or relays driven with voltage level 30VAC or 60VDC or less or manual contacts which support light load.

Reference **Remote contact**

■ Remote contact enabled operation name

(1) Recording ON/OFF and three chart speed selection (two terminals of EX1 and EX2 are used)

(2) Messages (No. 01 and 02) selection and printing execution (two terminals of EX1 and EX2 are used)

(3) Messages (No. 01 to 05) selection and execution (four terminals of EX1 to EX4 are used)

(4) Digital data printing (arbitrary one terminal)

(5) List printing (No. 1 to 3) (arbitrary one terminal for each)

(6) Integration reset (arbitrary one terminal)

(7) Messages No. 01 to 20 printing execution (each arbitrary one terminal)

(8) Time correction execution (arbitrary one terminal)

Each function requires short-circuit for one second or more between COM terminal and each terminal.

■ Operation allocation

Setting of allocation of operations to each terminal (EX1 to EX20) is required.

■ Name of operations which require setting

(1) Recording ON/OFF and three chart speed selection (See 8-7. Chart Speed Settings.)

(2) Message selection and printing execution (See 8-14. Message Printing 1 Settings.)

3) Operation for which terminal No. is decided automatically ON: Short-circuit OFF: Open

<table>
<tr><th>Operation name</th><th>Terminal contact signal</th></tr>
<tr><td>(1) 3 chart speed selection</td><td>3 chart speed setting other than the setting here is required.
(See 8-7. Chart Speed Settings.)
<table>
<tr><th colspan="2" rowspan="2">Recording ON/OFF and 3 chart speed selection</th><th colspan="2">Between COM and EX□ terminals</th></tr>
<tr><th>EX1</th><th>EX2</th></tr>
<tr><td rowspan="3">Recording ON</td><td>CS1</td><td>OFF</td><td>OFF</td></tr>
<tr><td>CS2</td><td>ON</td><td>OFF</td></tr>
<tr><td>CS3</td><td>OFF</td><td>ON</td></tr>
<tr><td colspan="2">Recording OFF</td><td>ON</td><td>ON</td></tr>
</table>
Chart recording must be ON.</td></tr>
<tr><td>(2) Message printing (No.01 and 02)</td><td>Message setting other than the setting here is required.
(See 8-14. Message Printing 1 Settings.)
<table>
<tr><td>Message No. 01</td><td>COM and EX1</td><td rowspan="2">For trigger
 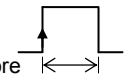
1 sec.or more</td></tr>
<tr><td>Message No. 02</td><td>COM and EX2</td></tr>
</table>
At the point when the trigger signals (1 second or more) are given, the selected message is printed.
Message printing with key is available.</td></tr>
<tr><td>(3) Message printing (No. 01 to 05)</td><td>Message setting other than the setting here is required.
(See 8-14. Message Printing 1 Settings.)
<table>
<tr><th rowspan="2">Message</th><th colspan="4">Between COM and EX□ terminals</th></tr>
<tr><th>EX1</th><th>EX2</th><th>EX3</th><th>EX4 *</th></tr>
<tr><td>No.01</td><td>OFF</td><td>OFF</td><td>OFF</td><td rowspan="5">For trigger
 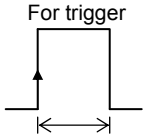
1 sec.or more</td></tr>
<tr><td>No.02</td><td>ON</td><td>OFF</td><td>OFF</td></tr>
<tr><td>No.03</td><td>OFF</td><td>ON</td><td>OFF</td></tr>
<tr><td>No.04</td><td>ON</td><td>ON</td><td>OFF</td></tr>
<tr><td>No.05</td><td>OFF</td><td>OFF</td><td>ON</td></tr>
</table>
* After message No. is selected, when the trigger signals (1 second or more) are given, the selected message is printed.
Chart recording must be ON.
Message printing with key is available.</td></tr>
</table>

4) Operation which can be allocated to arbitrary terminal No. ON: Short-circuit OFF: Open

<table>
<tr><th>Operation name</th><th>Terminal contact signal 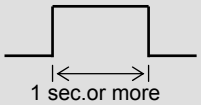 1 sec.or more</th></tr>
<tr><td>(4) Digital data printing</td><td>Turn ON the terminal No. specified to “Digital data printing.”
Chart recording must be ON.
Digital data printing with key is enabled.
Even during execution, the acceptance can be repeated only once.</td></tr>
<tr><td>(5)List printing (List No.1, 2, and 3)</td><td>Turn ON the terminal No. specified to “List 1, List 2, or List 3 printing.”
Chart recording must be ON.
List printing with key is available.
(See 8-13. List Printing Settings)</td></tr>
<tr><td>(6)Integration reset</td><td>When “Collective reset with remote contacts (EX)” is selected with “Calculation programming”, turning ON the terminal No. specified to “Integration reset” resets the integration value.
(See 8-4. Calculation Settings.)</td></tr>
<tr><td>(7)Message printing (No.01 to No.20)</td><td>Message setting other than the setting here is required.
(See 8-14. Message Printing 1 Settings.)
Turn ON the terminal No. specified to “Message printing (No. 01 to 20).”
Chart recording must be ON. Message printing with key is available.</td></tr>
<tr><td>(8)Time correction</td><td>When the current time (second) is within 0 to 30 seconds, the time is corrected to zero seconds by dropping the seconds. When it is within 31 to 59 seconds, the time is put forward one minute by rounding up and corrected to zero seconds.</td></tr>
</table>

7. Communication I/F terminal wiring (partly option)

AH4000 can be connected for communications with RS232C, RS422A, RS485, and Ethernet.

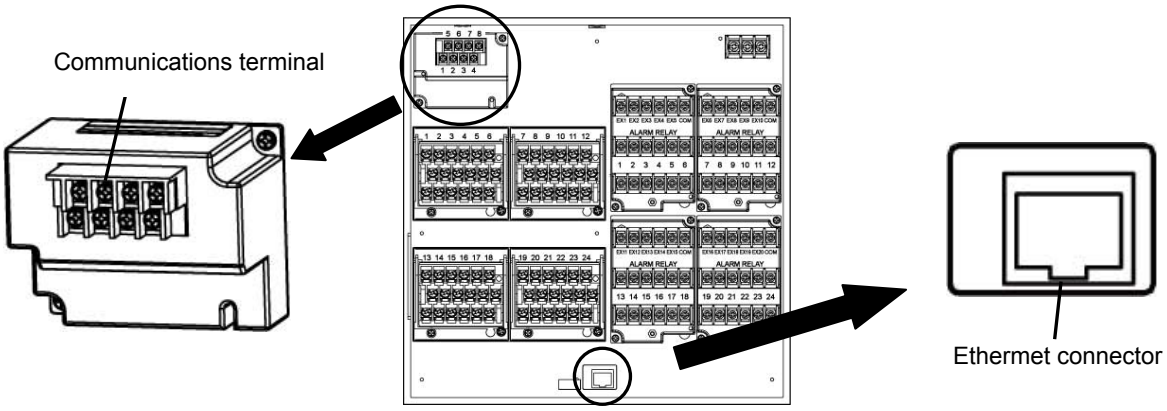

1) Communications terminal type (option)

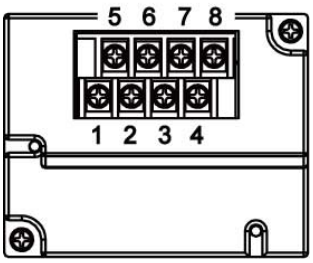

		1	2	3	4	5	6	7	8
COM1	RS232C *				SG	SD		RD	
	RS422A *				SG	SDA	SDB	RDA	RDB
	RS485 *				SG	SA	SB	Short with SA	Short with SB
COM2	RS485 or Low order	SA	SB	SG					

* RS232C and RS422A/485 of COM1 are to be specified on purchase.

2) Communications cables

Please prepare communication cables before wiring in advance.

Since exclusive cables are available from us, place an order.

(1) RS232C

Connection between PC and the unit or a line converter

Cable	9-pin connector ↔ Crimp type ring terminals RS232C cable
Shape	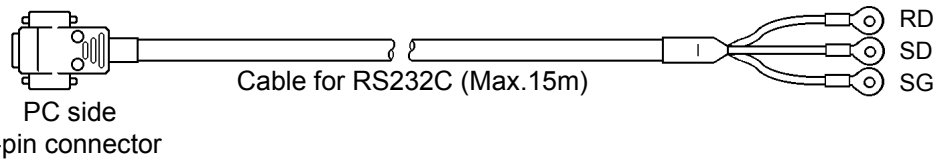
Internal wiring	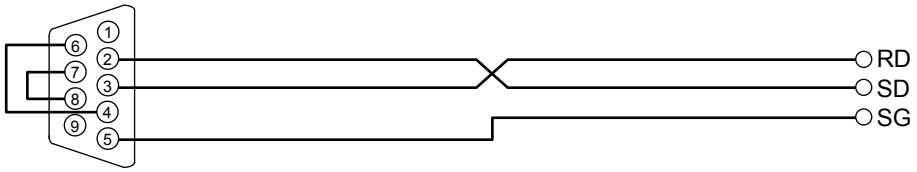
Model code	RZ-CRS6□□ Cable length: 01 to 15m (specified)

(2) RS422A

Connection between a line converter and the unit

Cable	Crimp type ring terminals ↔ Crimp type ring terminals RS422A cable (for a line converter)
Shape	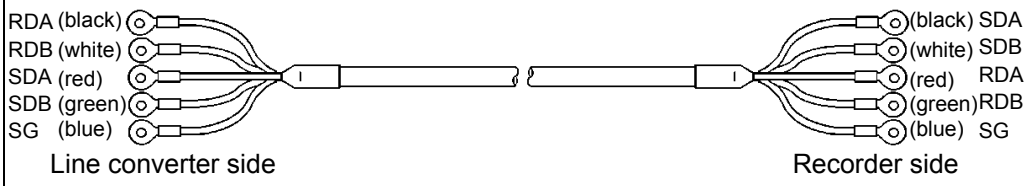 4-core cable of twisted 2-core cables of twisted VCTF lines. Each side has a SG (signal ground) line. Since the line converter has no SG terminal, cut and use the cable.
Internal wiring	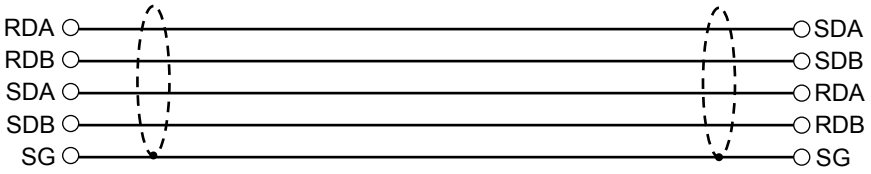
Model code	RZ-CRA2□□ Cable length: 01 to 99m (specified)

Connection between the unit and other devices

Cable	Crimp type ring terminals ↔ Crimp type ring terminals RS422A cable (for parallel)
Shape	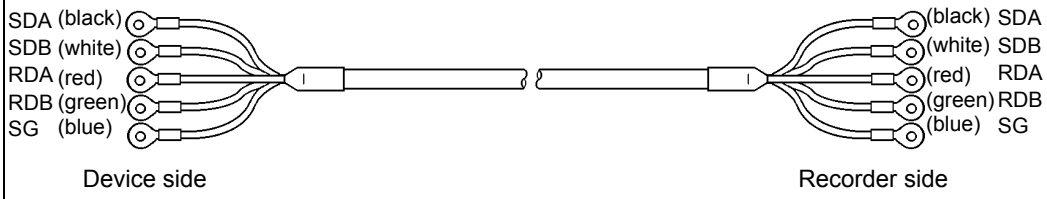 4-core cable of twisted 2-core cables of twisted VCTF lines. Each side has a SG (signal ground) line.
Internal wiring	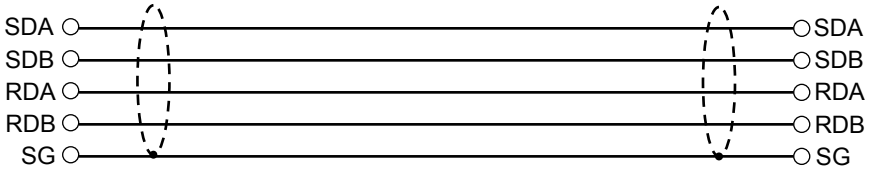
Model code	RZ-CRA1□□ Cable length: 01 to 99m (specified)

(3) RS485

Connection between the unit and other devices and between a line converter and the unit

Cable	Crimp type ring terminals ↔ Crimp type ring terminals RS485 cable
Shape	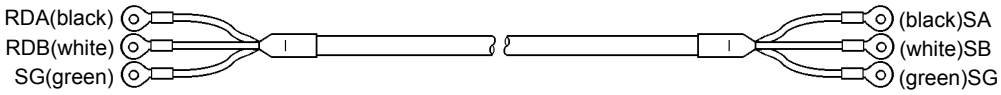 Device side, Line converter side　　Recorder side 2-core cable of twisted CVVS lines. Each side has a SG (signal ground) line. Since the line converter has no SG terminal, cut and use the cable.
Internal wiring	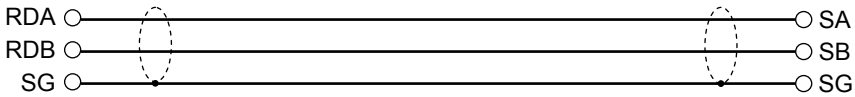
Model code	RZ-LEC□□□ Cable length: 001 to 200m (specified)

(4) Ethernet

- Connection between PC and devices
  For direct (one-to-one) connection, use crossover twist-pair cables with shield (available locally as STP cable).

- Connection between HUB and devices (multiple devices can be connected)
  For (one-to-N) connection between PC and devices via HUB, use straight twist-pair cables with shield (available locally as STP cable).

3) Communications line wiring

(1) RS232C wiring

PC and devices are connected one-to-one with RS232C.

Example of terminal connection

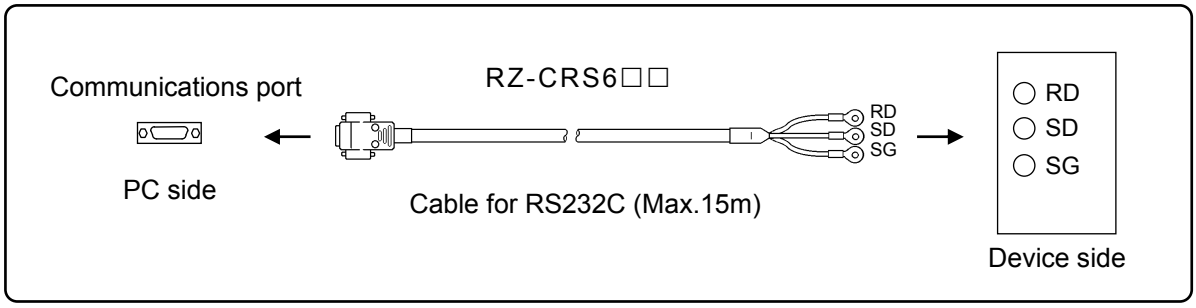

(2) RS422A wiring

PC and multiple devices are connected with RS422A. A line converter is required.
RS422A cable is within 1.2km of total extension and up to 31 devices can be connected.
Install a resistor of 100Ω to the last edge of the transmission line device side.
(General metal film resistors will be fine. They are available from us, place an order.)

Example of terminal connection

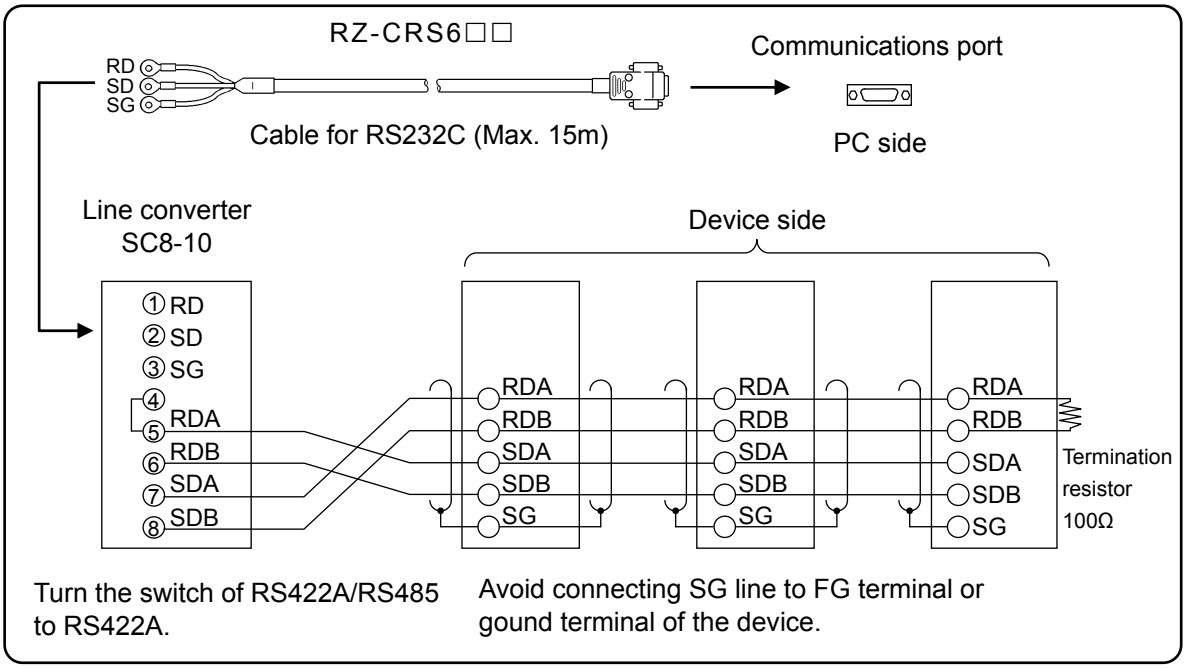

(3) RS485 wiring

PC and multiple devices are connected with RS485. A line converter is required.
RS485 cable is within 1.2km of total extension and up to 31 devices can be connected.
Install a resistor of 100Ω to the last edge of the transmission line device side.
(General metal film resistors will be fine. They are available from us, place an order.)

Example of terminal connection

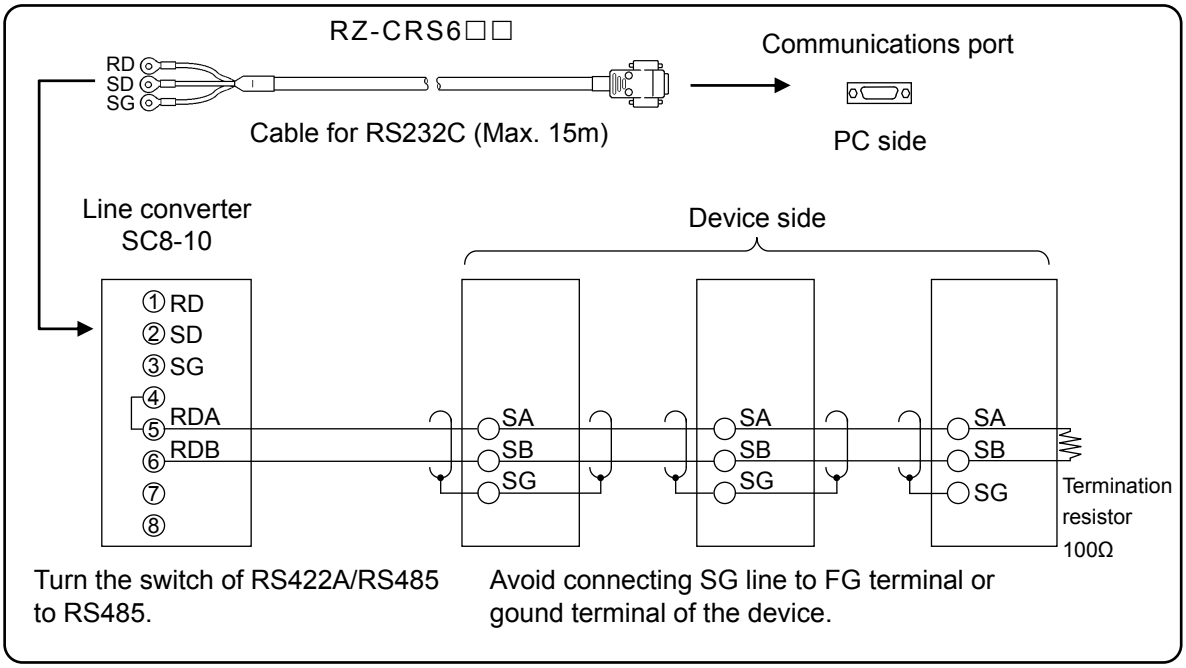

(4) RS485 wiring 2 (Low order communication)

Example of terminal connection

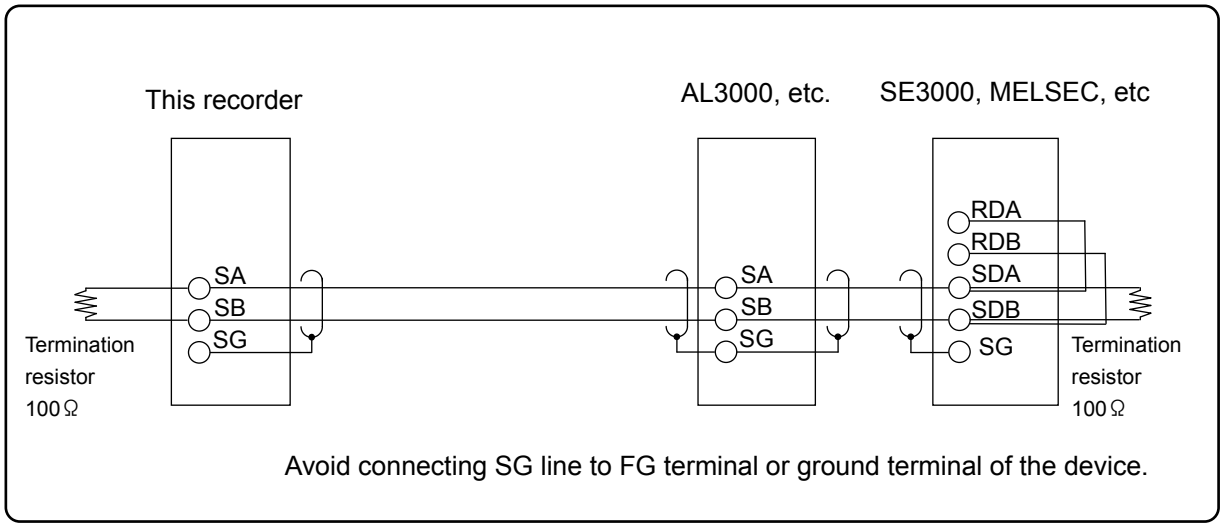

(5) RS485 wiring 3 (SYSMAC)

Example of terminal connection

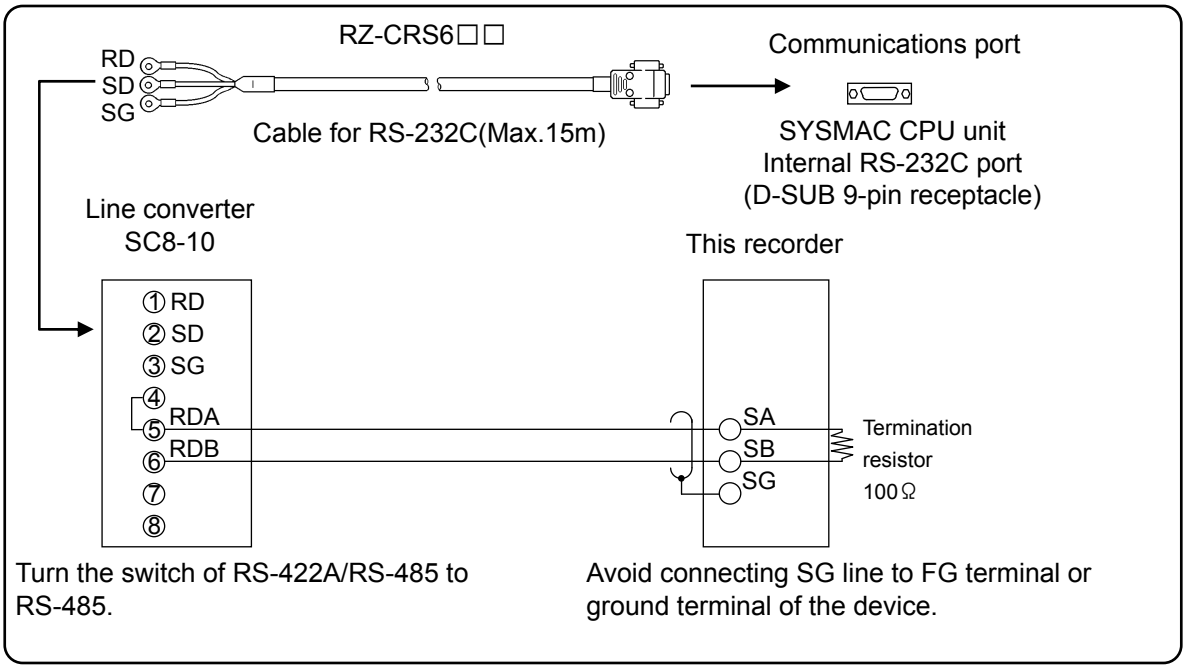

(6) Ethernet wiring

● Example of connection between PC and Ethernet devices (one-to-one connection)

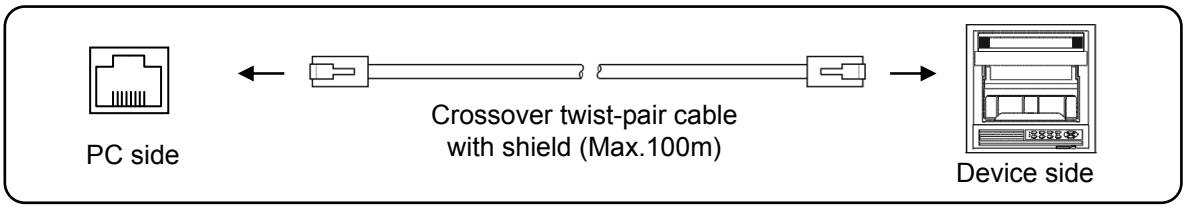

● Example of connection between PC and HUB/Ethernet devices (one-to-N connection)

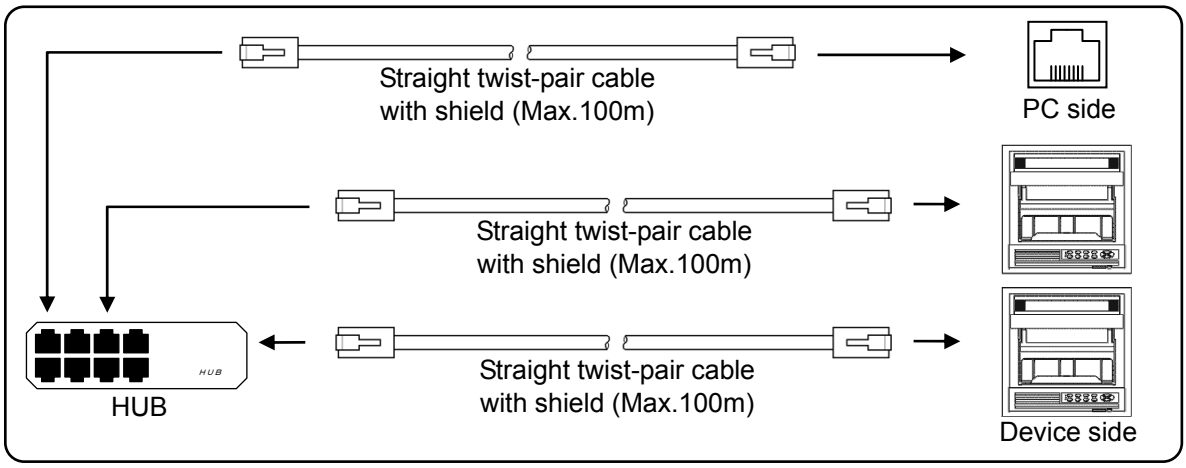

● Example of connection of devices (one-to-one connection)

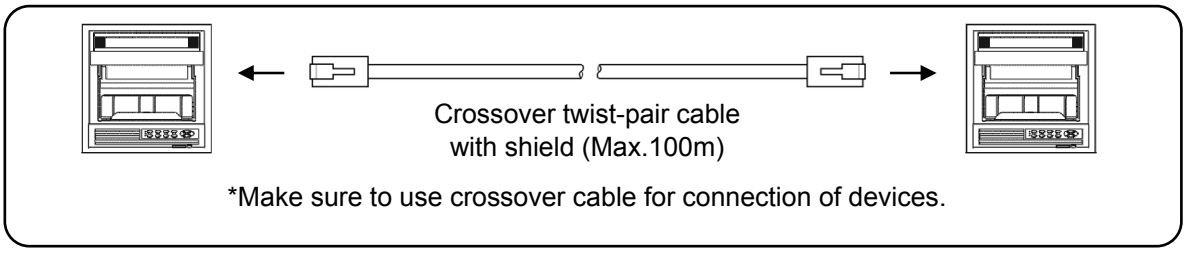

5. Part Names

5-1. Front Section of Internal Unit

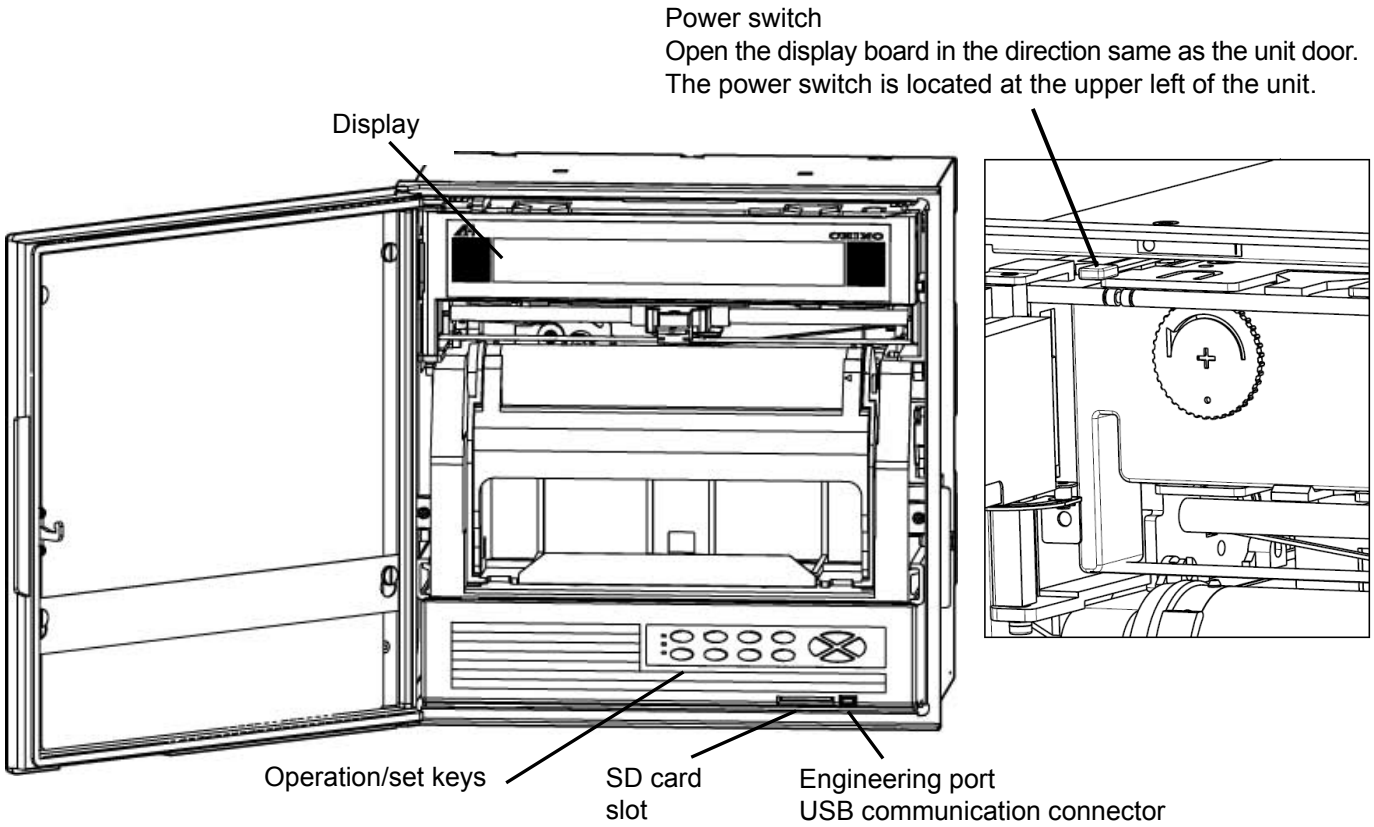

Note **How to handle the door**

The front of the door is made of glass. Avoid giving any shock to the glass or giving any strong force to the frame for preventing any injury due to breakage.

5-2. Operation/Set Keys

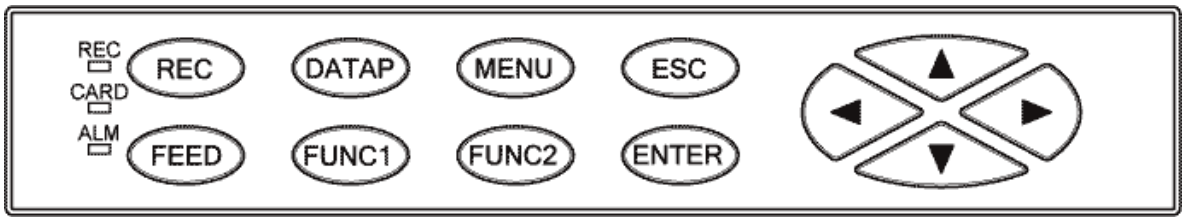

Status LED

- ●REC
  Lights in green while recording is on. Recording is turned ON/OFF by the REC key.
  Flashes when chart ends.
- ●CARD
  Lights in green when SD card is recognized by the unit, or flashes in a recognition process.
- ●ALM
  Flashes in red when alarm occurs.

Key names		Functions
REC	Record key	Turns ON/OFF recording. Used with the ENTER key.
FEED	Feed key	Feeds chart at a speed of 600mm/min while this key is pressed.
DATAP	Data print	Prints the data at the time of pressing this key. Used with the ENTER key.
FUNC1	Function 1 key	Switches and sets functions (function is shown on the display).
FUNC2	Function 2 key	Switches and sets functions (function is shown on the display).
MENU	Menu key	Displays various setting items.
ESC	Escape key	Returns to the previously displayed screen.
▲/▼ ◀/▶	Up/Down Left/Right	Moves the cursor up/down and left/right. Used also to select setting items or values. Used also to advance the channel number.
ENTER	Enter key	Used to register various settings.

6. Operation

6-1. Preparation for Operation

1. How to set chart paper

Note **Chart feeding holder**

When opening the chart feeding holder, hold resin part.

Note **Handling of chart cassette**

Be careful of injury by dropping the chart cassette after pulling it from inner unit. Take care not to catch your fingers in the unit when putting the chart cassette back.

Note **Pulling out the chart cassette**

When pulling out the chart cassette, turn recording OFF.

1. Pulling out the chart cassette

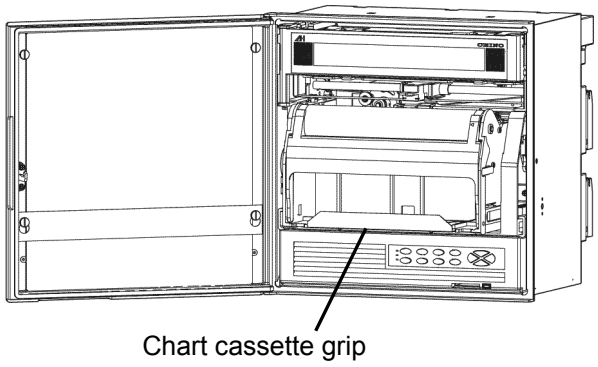

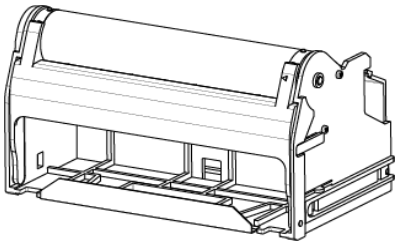

(1) Open the unit door.
(2) Hold the chart cassette grip and pull it toward you.

2. Setting chart paper

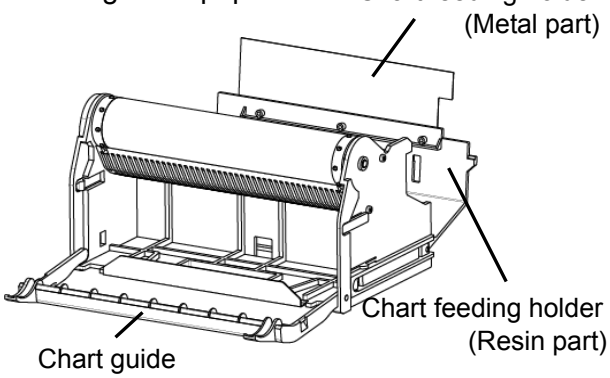

(1) Open the chart guide and chart feeding holder.
(2) Loosen the both ends of chart to prevent double feed.

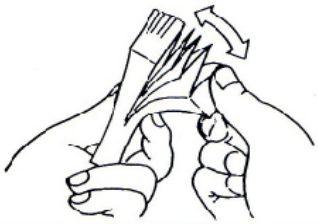

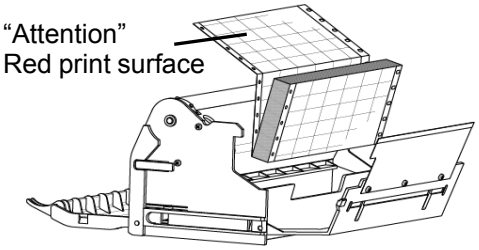

(3) Set chart in the chart housing at the back of the chart cassette. The "round" hole and "oval" hole should be at the left and right side of the chart respectively. Make sure to set chart in the correct direction.

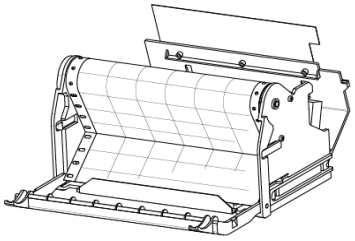

(4) Draw out chart approximately 20cm and set holes on the both ends to the sprockets of the chart drum. Put two or three folds of chart in the chart tray at the front of the chart cassette and then close the chart guide and chart feeding holder opened in the step (1).

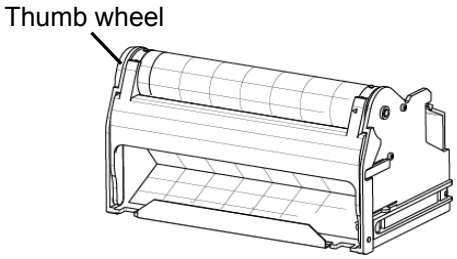

(5) Turn the thumb wheel downward and make sure that the holes on the both ends of chart are not released from the sprockets, and feeding is smoothly done.

3. Returning the chart cassette to the inside of the unit

(1) Align the guide of the chart cassette with the guide rail located at the both sides of the internal chassis and then insert the cassette until it is locked.
(2) Operate the FEED key to check if the chart is fed properly and smoothly. If not, reset the chart again.

2. How to attach ribbon cassette

1. Preparation

(1) Make sure that the unit is turned ON and then press the REC key (recording OFF).
(2) The printer stops around the center and the ribbon holder moves backward.
(3) Prepare a ribbon cassette.

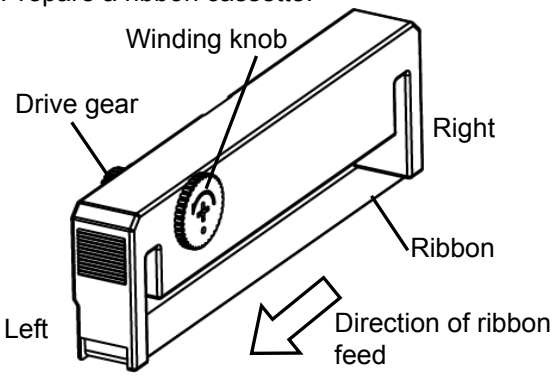

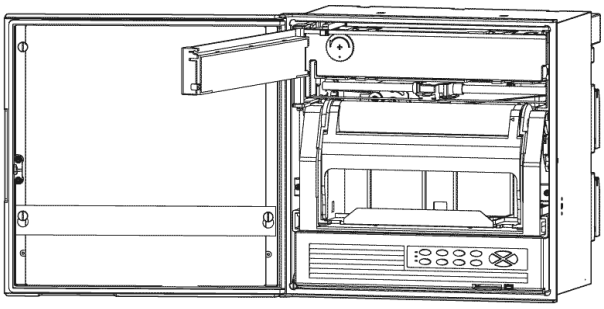

(4) Open the unit door.
(5) Open the display board in the direction same as the unit door.

2. Attaching ribbon cassette

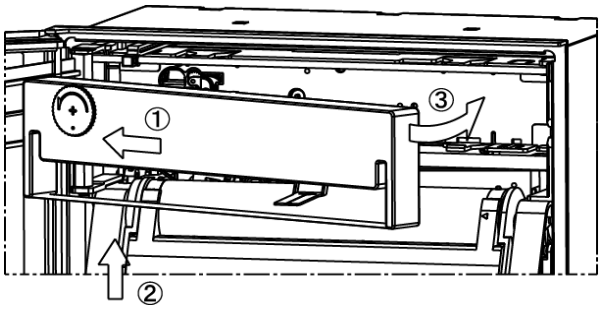

(1) Insert a ribbon cassette to the left holder locker.
(2) Put the ribbon under the printer and push the right side of the ribbon cassette.
(3) Insert the ribbon cassette to the right holder locker.
(4) Make sure that the ribbon cassette is properly held by the left and right holder lockers.
(5) Turn the winding knob counterclockwise.
(6) Return the display board in place.
(7) Make sure that the unit is turned ON and then press the REC key (recording ON).
(8) Feed the ribbon a few centimeters while recording is ON. Check the ribbon feeding condition.

3. Preparation for ribbon cassette replacement

(1) Move the printer to the center and the ribbon holder backward as in the case of attaching a ribbon cassette.
(2) Open the display board in the direction same as the unit door.

4. Removing ribbon cassette

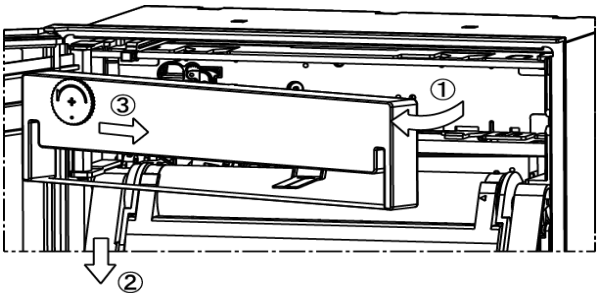

(1) Pull the right side of the ribbon cassette to remove it from the right holder locker (see below tips for removal).

Insert your index finger to the back of the right side of ribbon cassette.

While holding the ribbon holder with your thumb to prevent it from moving forward, pull your index finger.

(2) Pull the ribbon out of the printer.
(3) Pull the left side of the ribbon cassette to remove it from the left holder locker.

Ref 1 **When winding failure occurs**

Draw out the ribbon from the left side and then wind up by turning the winding knob.

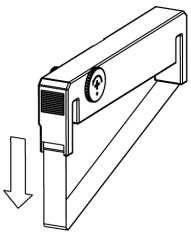

Ref 2 **Replacement cycle of ribbon cassette**

Under standard operating conditions (temperature: 23 ±2°C, humidity: 55 ±10%RH), it can last about three months. However, it may be shortened depending on temperature, humidity or use of the unit (chart speed, intervals of periodic data printing, etc.).

Note **Replacement of ribbon cassette**

When replacing the ribbon cassette, be careful not to catch your fingers in the unit.

6-2. Basic Operation

1. Power on

Turn the power switch to ON.
Data will be shown on the display after about 10 seconds.
After detecting the initial position, the printer prints the date and time and then feeds chart about 5mm.

Note 1 **Display backup**

Backup of settings, clock and display mode are made. However, channel number is not saved so the data with smallest channel number within set range will be dsplayed.

Note 2 **While recording is OFF**

The date/time printing is not performed at power-on.

2. Language setting

The language setting is displayed at initial startup or after memory clear.

Press the ENTER key to make it available for setting and then set the display language with the ▲/▼ keys.
Language can be selected from English and Japanese.
When setting is completed, move the cursor to Set and press the ENTER key to register the setting.

The language setting can also be set later.
(Refer to “8-29 Soft Dip Switch Settings” in the instruction manual for “General” provided separately.)

3. Switching of display

The unit can provide six display modes depending on the number of inputs.
Either fixed or sequential display can be selected for each display mode (pressing the FUNC1 key switches the display between AUTO (sequential) and CONST (fixed).
With the sequential display, channel number advances every two seconds (factory default which can be changed).

While holding down the ESC key, press the ▲/▼ key to change the display mode.

See “8-24. Display Settings” to set default display mode at power-on.

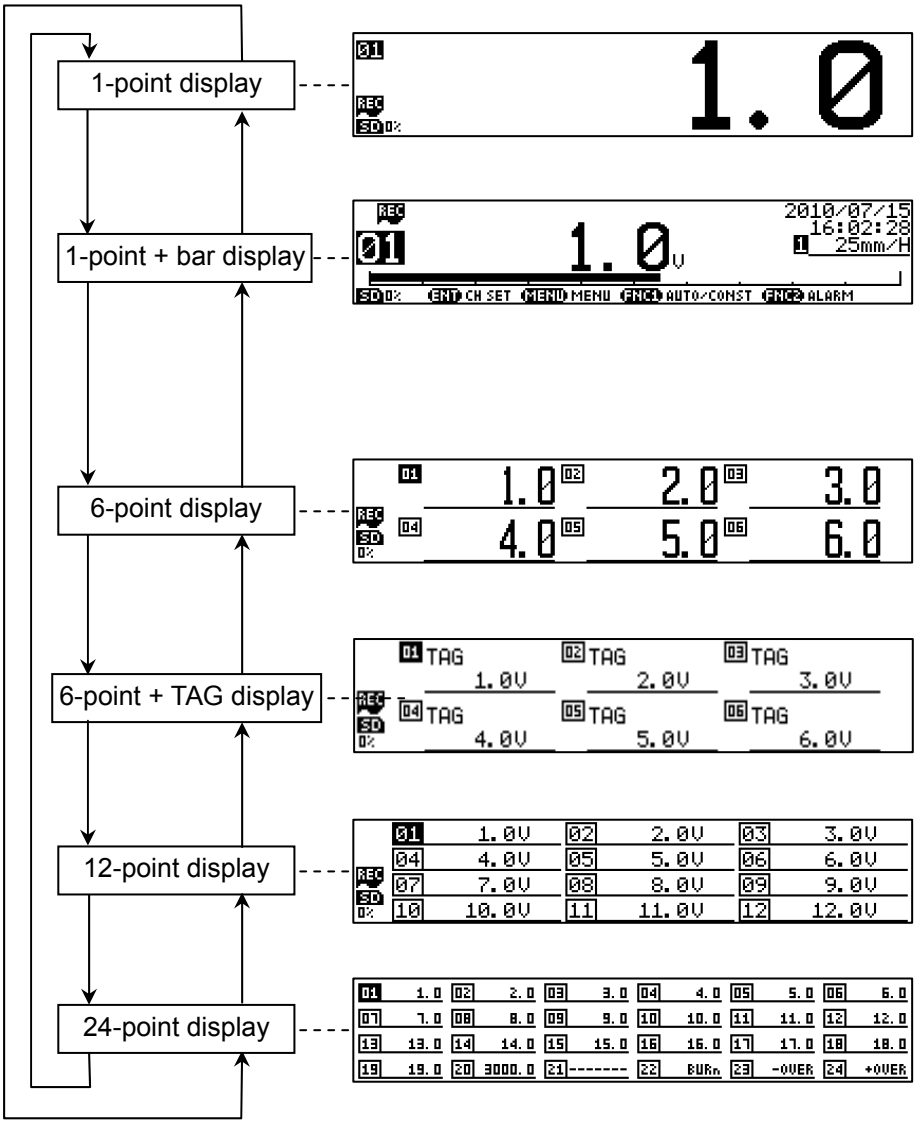

CH No.
Measured value
Chart end/recording ON
SD card remaining amount
AUTO/CONST
Data print/list print

CH No. Chart end/recording ON
TAG SD card remaining amount
Measured value Chart speed
Unit Recording point indicator
Date/time Key guide
AUTO/CONST
Data print/list print

CH No.
Measured value
Chart end/recording ON
SD card remaining amount
AUTO/CONST
Data print/list print

CH NO.
Measured value Unit
Chart end/recording ON
SD card remaining amount
AUTO/CONST
Data print/list print
TAG

CH No. Unit
Measured value
Chart end/recording ON
SD card remaining amount
AUTO/CONST
Data print/list print

CH No.
Measured value

↓: ESC + ▲ ↑: E SC + ▼

To switch from “1-point display” to “1-point + bar display”, press the ▲ key while holding down the ESC key.

To switch from “1-point display” to “24-point display”, press the ▼ key while holding down the ESC key.

4. Chart recording operation

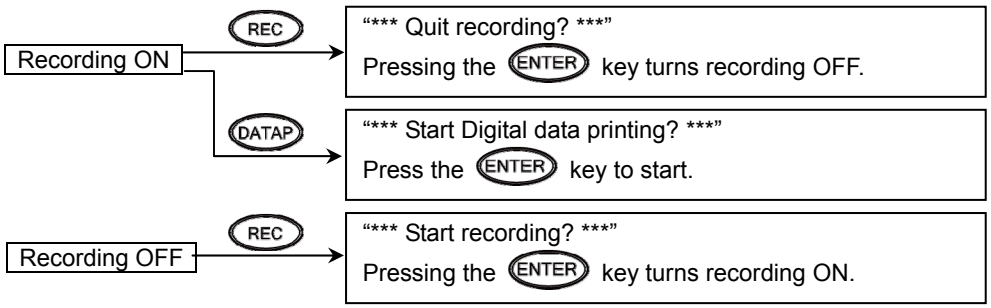

* Any of the above settings can be cancelled by pressing the ESC key.
(The setting is cancelled also after around 10 seconds without key operation.)

1) Turning ON/OFF chart recording
Recording can be turned ON/OFF by pressing the REC key → ENTER key.
While recording is ON, the "REC" status LED lights up.
Recording is not performed while it is OFF, but reading inputs, updating data and calculating alarms are performed. Data printing, list printing and message printing are unavailable.

Note **Pressing the REC key → ENTER key becomes invalid in some cases**

(1) Key operation is unavailable when is shown on the display indicating that keys are locked.
(2) When using remote contacts (optional), key operation becomes unavailable when recording is turned OFF by a remote contact terminal.

Note **Tear of the chart**

When dotting same place, chart may be torn. For preventing tear of the chart, set faster chart speed.
If "Dot-Interval" is "Fast", change to "Normal".

2) Data printing
Currently executing trace printing is interrupted to print numeric values of the latest measurement data as shown in the below example.
Press the DATAP key → ENTER key to perform data printing.
Use the periodic data printing function to perform data printing periodically.
This cannot be performed while recording is OFF or keys are locked.
Colors used for printing changes every time data printing is executed in the following order: red → black → blue → green → brown → purple (repeated).

Reference **Operation during printing and print cancel**

Operation: Operations including measurement continue without being interrupted.
Cancel: To stop data printing halfway through, press the REC key → ENTER key. The unit will be put into recording OFF status when the currently printing line is finished. However, the behavior depends on the unit condition when the instruction is received.
Pressing the REC key → ENTER key later returns to the previous trace printing status.

Example of data printing

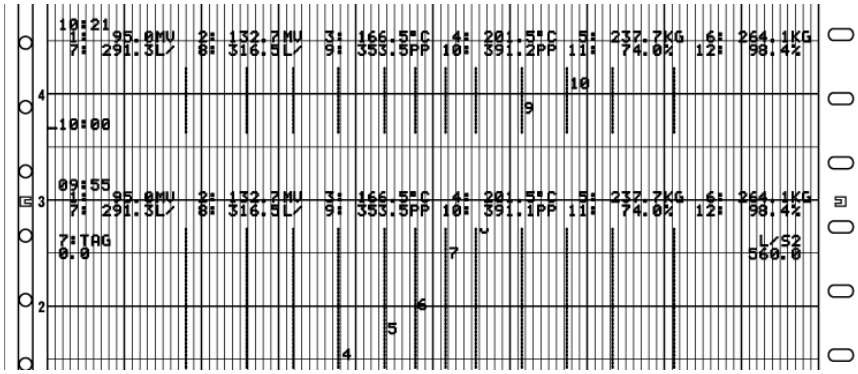

3) Chart feed

Chart can be fed using the FEED key.

While the FEED key is pressed, chart is fed at a speed of 600mm/min. When fast-feeding chart, recording (dot-printing) is stopped.

Feed chart when a measurement target or measurement condition is changed.

Reference **Feeding chart**

Chart can be fed manually using the drum. However, in this case, a few millimeters of chart may not be fed due to mechanical nature of the unit. Therefore, we recommend that chart be fed by the FEED key.

Also, for the same reason, use the FEED key to feed when new chart is set.

4) Aligning time line

When operating the unit with a chart speed of multiples of 12.5 (mm/H), it is advisable to align the time line print with the time scale of chart for easier view of the result.

The following shows a bad example.

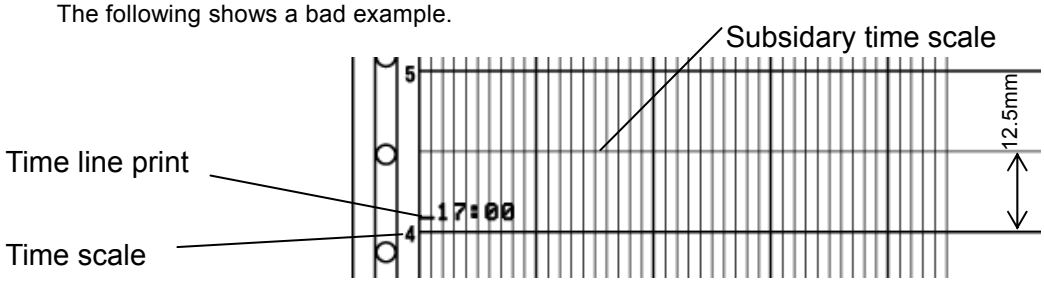

This is useful only when you use a chart with 12.5mm-pitch time scale.

(1) There is a time line setting mark (◁) on the right side of the chart guide located at the front of the chart cassette.

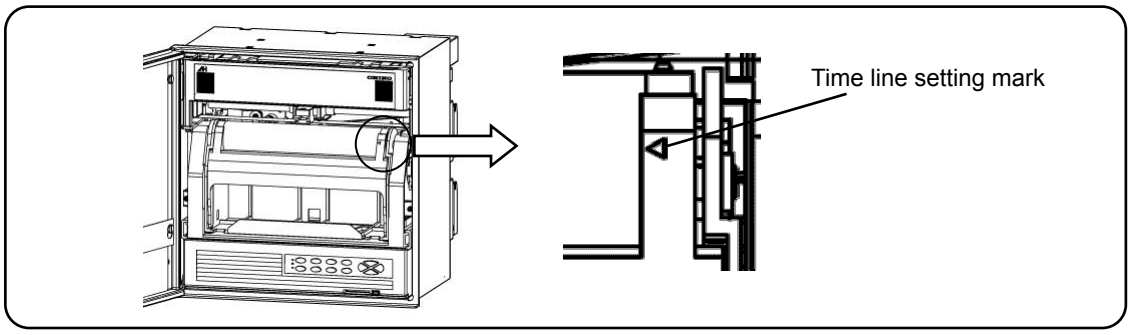

(2) Align a time scale line with the setting mark (◁) as viewed from the front by pressing the FEED key (do not align it manually).

(3) It may be a good idea to set a time scale line 1 to 2mm above the setting mark (◁) to perform a fine adjustment later.

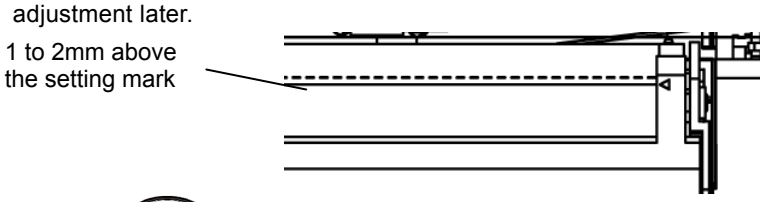

(4) Press the REC key and turn off the “REC” status LED.

(5) Press the REC key at a desired time <xxh 00min> and turn on the “REC” status LED.

(6) After a few hours, check to see if the time line print is aligned with a time scale line. If the time line print comes behind a time scale line, press the FEED key briefly and see how it works. If it comes ahead, remove the chart and set it back for a few hours and then try again.

6-3. Operation

1. Types and contents of chart recording

There are two types of chart recording: trace printing and digital recording/printing. Without setting particular items, trace printing, channel number printing and fixed time printing are performed while recording is ON.

Item			Contents
Chart recording	Trace printing		Records a trend for each channel by dot printing with different color. The color can be specified arbitrarily (six colors in total).
	Digital recording/printing	Channel number printing	Prints channel number interlocking with chart speed.
		Alarm printing	Prints time or alarm point when alarm is generated/cleared.
		Periodic data printing	Adds digital record/print on a trace print in desired intervals.
		Data printing	Performs digital recording/printing when required, suspending trace printing.
		List printing	Prints a list of all or specified parameters when required.
		Fixed time printing	Prints date, time/time line, max/min chart record, channel number, tag and unit interlocking with chart speed.
		Message printing	Prints a message which can contain up to 72 characters.
		Calendar timer printing	Prints data when both calendar timer and printing are set to ON.
		Operation recording	When using remote contacts (optional), the status of remote input No. (ON/OFF) is printed at the specified position with a bar line.
		Setting change mark	When setting is changed, “Δ” is printed at the right side of chart.
		Power-on time printing	Date and time are printed at power-on.

Example of trace printing and fixed time printing

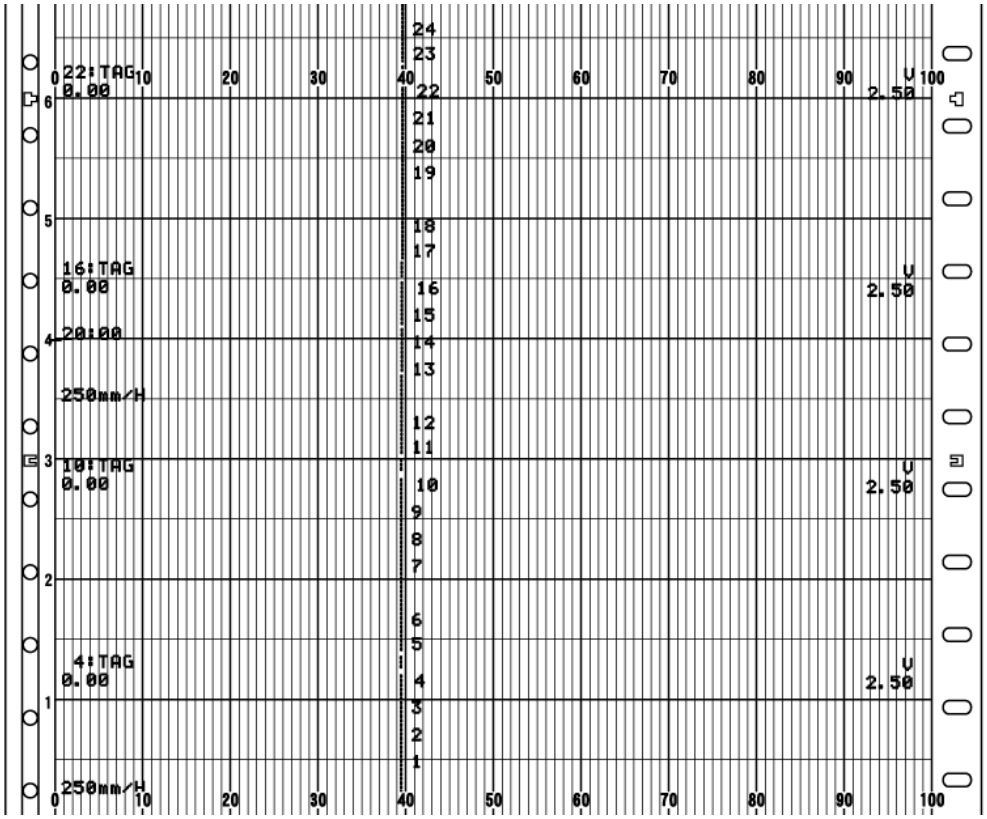

2. Fixed time printing interval

When recording is ON at the time of power-on, fixed time printing is performed first.
The following table shows printing intervals which vary depending on the printing item.

Time and time line	Channel number	Chart speed	Max/min chart record, tag and unit
Varies depending on the chart speed	At approx. 6mm intervals, in order of ascending channel number	At approx. 84mm intervals	At intervals of channel number, in order of ascending channel number

1) Printing intervals of time and time line
Time and time line are printed at the following intervals which vary by the chart speed. The start point of the intervals is 00h 00min.

Chart speed (mm/H)	Time and time line (*)	Time line only	Year/month/date
1 - 9	12h 00min only	6h	00h 00min only
10 - 15	4h	2h	
16 - 30	2h	1h	
31 - 60	1h	←	
61 - 119	1h	30min	
120 or higher	30min	←	

(*) When periodic data printing occurs at the same time, time printing is not preformed.

2) Printing interval of channel number
(1) Channel number is printed beside the trace printing (normally at the right of it) at 6mm intervals in order of ascending channel number, using the color same as the trace printing.
(2) There is a break after every six channels.
(3) When you skip channels, the number of breaks becomes: one break after every six channels plus the number of skips.
(4) Printing intervals of 6-point, 12-point and 24-point are 42mm, 84mm and 168mm respectively.

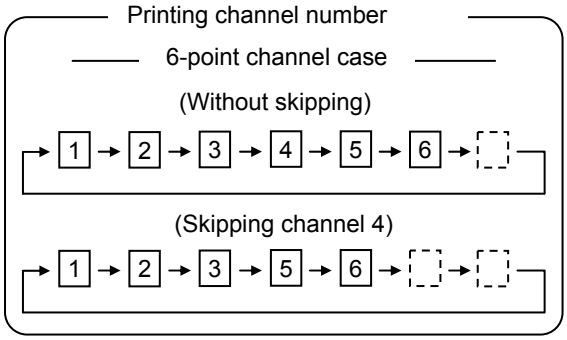

3) Printing interval of chart speed
Chart speed is printed in black at the left side of chart after every two breaks (approx. 84mm) of channel number printing.

4) Printing interval of max/min chart record, tag and unit
(1) These are printed at the left and right sides of chart at intervals of channel number printing in order of ascending channel number.
(2) In accordance with the channel number, maximum/minimum chart record, tag and unit are printed using the color same as the dot printing.
(3) Tag is not printed if not specified.
(4) When you set the recording format, printing contents vary depending on the selected format.

Standard (Standard), automatic range-shift (Auto Range)

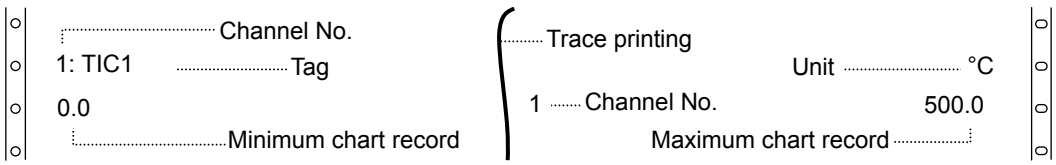

Note: When Auto Range is used, the max/min chart record of the range (one of the ranges R1 to R5) used at the time of printing will be printed.

Compressed/expanded printing (Comp. & Exp.Print)

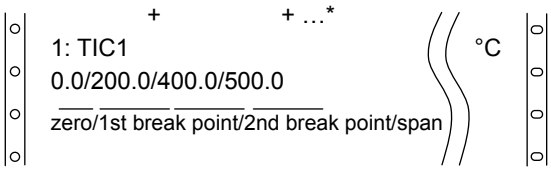

* A "+" mark is printed at the first and second break points.

Zone printing (Zone Print)

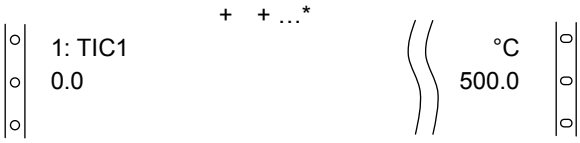

* A "+" mark is printed at the edge of the printing area to indicate it.

3. Restrictions on recording

1) Digital recording/printing unavailable at certain chart speeds
When chart speed is set to 251mm/H or higher, all digital recordings/printings will not be performed and only trace printing is performed. However, time line printing, power-on printing, data printing and list printing can be performed.

2) Dotting interval
Dot printing is performed at intervals of 5sec/point at normal speed, and 3sec/point at high speed. To prevent damage to chart caused by overlapping of dots, dotting interval becomes longer as chart speed decreases.
The chart speed interlock mode is also available, which performs dot printing depending on the chart speed.

Normal dot printing (approx. 5sec/point)	Fast dot printing (approx. 3sec/point)

The restriction expressed by the following will be placed when chart speed drops below a certain value.

$$\text{Dot printing interval (sec/point)} \approx \frac{180}{CS \times CH}$$

CS: chart speed
CH: number of channels

<6-point channel case>

CS (mm/H)	Interval	CS (mm/H)	Interval
1	Approx. 30sec	5	Approx. 6sec
2	Approx. 15sec	6	Approx. 5sec
3	Appro . 10sec	7	
4	Approx. 8sec	8	

For 6mm/H or higher CS, interval is fixed to approx. 5sec/point.

<6-point channel case>

CS(mm/H)	Interval	CS(mm/H)	Interval
1	Approx. 30sec	6, 7	Approx. 5sec
2	Approx. 15sec	8, 9	Approx. 4sec
3	Approx. 10sec	10, 11	Approx. 3sec
4	Approx. 8sec		
5	Approx. 6sec		

For 10mm/H or higher CS, interval is fixed to approx. 3sec/point.

3) Overlapping of digital recording/printing
The following order of priority is used for printing generally when printing positions of different items overlap.

(1) Data printing/list printing > time line printing > periodic data printing > alarm printing = fixed time printing = message printing
(2) The order of priority for fixed time printing is as follows:
Time line > time = channel number = chart speed = max/min chart record, unit and tag

Examples and special cases are described below.

Case 1: Data printing/list printing occurs while recording/printing.
Currently executing printing process is interrupted to execute data printing/list printing.

Case 2: Time line/time printing occurs while periodic data printing is in progress.
Only time line is printed. Time is not printed.

Case 3: Fixed time printing occurs when periodic data printing has short intervals.
The printing itself may not be performed.

Case 4: Alarm printing overlaps with max/min chart record, unit and tag.
The max chart record and unit are replaced by alarm print.

4. Abnormal input

1) Out-of-range input

When an input is out of the chart printing range or measuring range, the unit indicates it by the following display or printing.

Measuring range: determined by the input type described in “8-2. Input Type Settings”.

Chart printing range: trace printing range described in “8-2. Input Type Settings”.

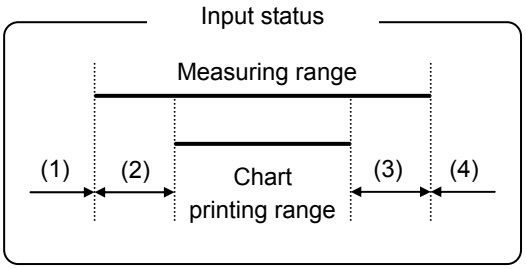

No.	Input status	Display	Printing	
		Digital	Digital	Trace
(1)	Input under the lower limit of measuring range*	-OVER	-OVER	Downscale burnout
(2)	Input under the lower limit of chart printing range	Normal display	Normal print	
(3)	Input over the upper limit of chart printing range	Normal display	Normal print	Upscale burnout
(4)	Input over the upper limit of measuring range*	+OVER	+OVER	

* Digital display/printing is available for an input outside the measuring range if it is within ±5% of the span.

2) Disconnection of input signal

Display and printing made at a disconnection of input signal depends on the “Burnout” setting.

Burnout setting	Display	Printing	
	Digital	Digital	Trace
None	Undefined	Undefined	Undefined
Down	BURN	BURN	Downscale burnout
UP	BURN	BURN	Upscale burnout

7. Factory Default Settings

7-1. List of Factory Default Settings

<table>
<tr><th>Item</th><th>Default value</th></tr>
<tr><td>(1) Time</td><td>Current time (year/month/date: Japan time)</td></tr>
<tr><td>(2) Range</td><td>(1) Input type V : -50.00 to 50.00
(2) RJ None
(3) Chart printing -50.00 to 50.00</td></tr>
<tr><td>(3) Scale</td><td>-50.00 to 50.00</td></tr>
<tr><td>(4) Unit</td><td>V</td></tr>
<tr><td>(5) Tag</td><td>Not set</td></tr>
<tr><td>(6) Display/printing On and OFF</td><td>(1) Display All channels ON
(2) Trace printing (dot printing) All channels ON
(3) Digital printing All channels ON
(4) SD card recording All channels ON</td></tr>
<tr><td>(7) Chart speed</td><td>25mm/H</td></tr>
<tr><td>(8) Digital recording/printing</td><td>Data interval None</td></tr>
<tr><td>(9) Trace printing</td><td>Color and printing ON/OFF
<table>
<tr><th>Channel number</th><th>Color</th><th>Printing ON/OFF</th></tr>
<tr><td>1, 7, 13, 19</td><td>Red</td><td rowspan="6">All ON</td></tr>
<tr><td>2, 8, 14, 20</td><td>Black</td></tr>
<tr><td>3, 9, 15, 21</td><td>Blue</td></tr>
<tr><td>4, 10, 16, 22</td><td>Green</td></tr>
<tr><td>5, 11, 17, 23</td><td>Brown</td></tr>
<tr><td>6, 12, 18, 24</td><td>Purple</td></tr>
</table>
* Printing colors can also be specified arbitrarily.</td></tr>
<tr><td>(10) Alarm settings</td><td>Not set</td></tr>
<tr><td>(11) Subtract printing settings</td><td>Not set</td></tr>
<tr><td>(12) Message settings</td><td>Not set</td></tr>
<tr><td>(13) Password</td><td>3571</td></tr>
</table>

8. Setting Method

8-1. Basic Rules

The following provides general information on setting operations.

Pressing the ESC key can return to the measured value display from any window.

1. Setting items and parameters

The unit offers various condition settings to allow users to obtain various recording results and data.
Major items of measuring/recording conditions, such as range, scale and chart speed, are called “setting items”, whereas detailed items of each setting item are called “setting parameters” or just “parameters”.

2. Selecting setting item

Press the MENU key on the measured value display. A list of setting items will be displayed.
Use the ▼ ▲ ◄ ► keys to select a setting item and press the ENTER key to confirm your selection. Some setting items may use hierarchical display.

3. Selecting setting parameter

Select a setting parameter of a setting item.
A cursor is displayed at the left of each parameter. Move the cursor to a desired parameter using the ▼ ▲ ◄ ► keys.

4. Key acceptance and acceptance failure

When the cursor does not move by pressing the ▼ ▲ ◄ ► keys or when a parameter setting window does not open by pressing the ENTER key, it indicates that the keys have been unaccepted. Make sure to press the keys properly and try again.

5. Number of setting items and parameters

Setting items vary depending on the use of option. Also, the number of setting parameters differs by setting item. The items like time and chart speed have a single parameter whereas the items like range, scale and alarm have multiple parameters requiring channel specification.
Only the parameters necessary for the current setting become available for entry. Unnecessary parameters are replaced by “*” mark and the cursor does not move to them.

6. Checking setting parameters

There are two ways to check setting parameters: “list printing” and “display check”, the former prints all or specified setting items and the latter calls up parameters on the display.

7. Changing settings

To change settings, move the cursor (▷) located at the left of a setting parameter to the parameter to be set (changed). When the target parameter is selected by pressing the ENTER key, the set value will be highlighted and become settable. Each setting item generally uses the combination of four types of setting described below.

A parameter value is selected from options.
Use the ▲/▼ keys to select a desired value from options.

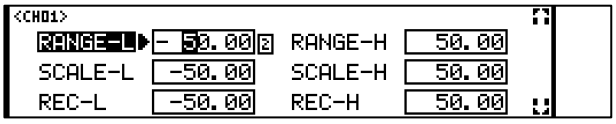

A parameter is set to an arbitrary value.
Use the ◀/▶ keys to move the digit, and the ▲/▼ keys to set number or select + or -.

Note: For parameters requiring setting of decimals, a box indicating decimal point position appears at the right side when they become settable. Change the number in the box to change the decimal point position.
Some parameters show the box only for reference.

Whether or not to use the parameter is set.
Pressing the ENTER key checks/unchecks the check box.

A parameter is set to an arbitrary character string.
Select an insert position or character with the ▲/▼/◀/▶ keys and press the ENTER key to enter. When all the desired characters are entered, move the cursor to Set located at the far right of the window and press the ENTER key to register.
Use the ▲/▼ keys to move to the parameter entry and character selection areas. Use the ◀/▶ keys to select an insert or change position while "•" is displayed at the left of the parameter entry area.
When you enter a character string exceeding the valid number of digits, the last digit will be deleted.

Note: Pressing the FUNC1 key switches the entry mode: alphabets, numbers, symbols and katakana.
(The mode to be switched depends on the parameter.)

When the ENTER key is pressed after setting (changing) a parameter value, the cursor moves to the next parameter. When all the necessary settings for each item are completed, move the cursor to Set at the bottom and press the ENTER key to register. After that, the previous window will be displayed.
At this time, if any error is detected in the settings, "Invalid setting" will be displayed and the current window will not change.

Reference **List of setting items**

The following table is a list of setting items displayed by pressing the MENU key (with full options).
Some models cannot set certain items, and such items are replaced by "*" mark. Items in [ ] field will be displayed when "Rec Adj" and "Inp Adj" are enabled according to "8-27. System Settings".
Items in the same column are related to each other. Items in [ ] field are required items.

Range	Chart	DataInt	PrtForm	SD CARD	Ether	Timer	Display	Rec Adj
Alarm	Dot	PrtTime	A.Range	USB	SNTP	Dig Inp	D.Order	Inp Adj
Calc	Sub Prt	ListPrt	Cmp&Exp	COM 1	E-mail	Ope.Rec	Date	*
Formula	Dot.Int	MsgPrt1	ZonePrt	COM 2	*	FailOut	System	*
Seg.Tbl	*	MsgPrt2	*	*	*	*	SysInfo	*

8-2. Input Type Settings “Range”

Parameters including range, RJ (internal/external switching of reference junction compensation), scale and unit can be set collectively for each channel.

1. Parameters

1) Input
Set the input type (INPUT), range (RANGE-L/H) and RJ internal/external (RJ) in accordance with the sensor to be connected (thermocouple or resistance thermometer) and the target measuring range.

2) Burnout
If a sensor (thermocouple or resistance thermometer) or input cable is disconnected, chart recording jumps to the upper (UP) or lower (DOWN) limit. This can be reflected to the display or output.

Note **Set “None” for parallel operation**

Connecting a thermocouple in parallel with another instrument may cause a trouble. If it has to be done, make sure to select “None” for burnout.
Please note that the recording accuracy is not guaranteed in this case.

3) Scale
Set the scale used for display or recording of actual input after setting input type (INPUT) and range (RANGE-L/H).
Scale setting (SCALE) is required when displaying/recording a voltage input from a converter with an arbitrary scale. In this case, the scale should use arbitrary scale factor of the voltage input. For thermocouple or resistance thermometer input, only the position of decimal point can be specified.

4) Chart recording range
Set the recording range of chart. Specify 0% position of chart with REC-L and 100% position with REC-H.

Note **Valid number of digits**

Up to five digits (six digits when including a minus sign) can be set for the upper/lower limit of range, scale and chart recording.
For numeric value settings with a decimal fraction, the lower/upper range should be -30000 to 30000 and the lower/upper scale and chart recording should be -30000 to 99999 with decimals excluded.

5) Sensor correction
Measurement value is offset by the specified value. Use this function to adjust the zero point.

6) Unit
Arbitrary characters can be set as unit. However, when numeric characters are set, you may find it difficult to distinguish the unit from measured data at data printing.
Up to six digits can be set, and upper two digits are printed only at digital printing.

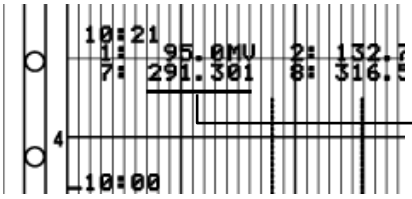

Unit is set to “01”.
Measured data is “291.3” in this case.

7) Tag
Tag name can be attached to each channel data.

8) Display, trace printing (dot printing), digital recording/printing, SD card recording ON/OFF
Select ON or OFF for each display/recording.

2. Parameter setting

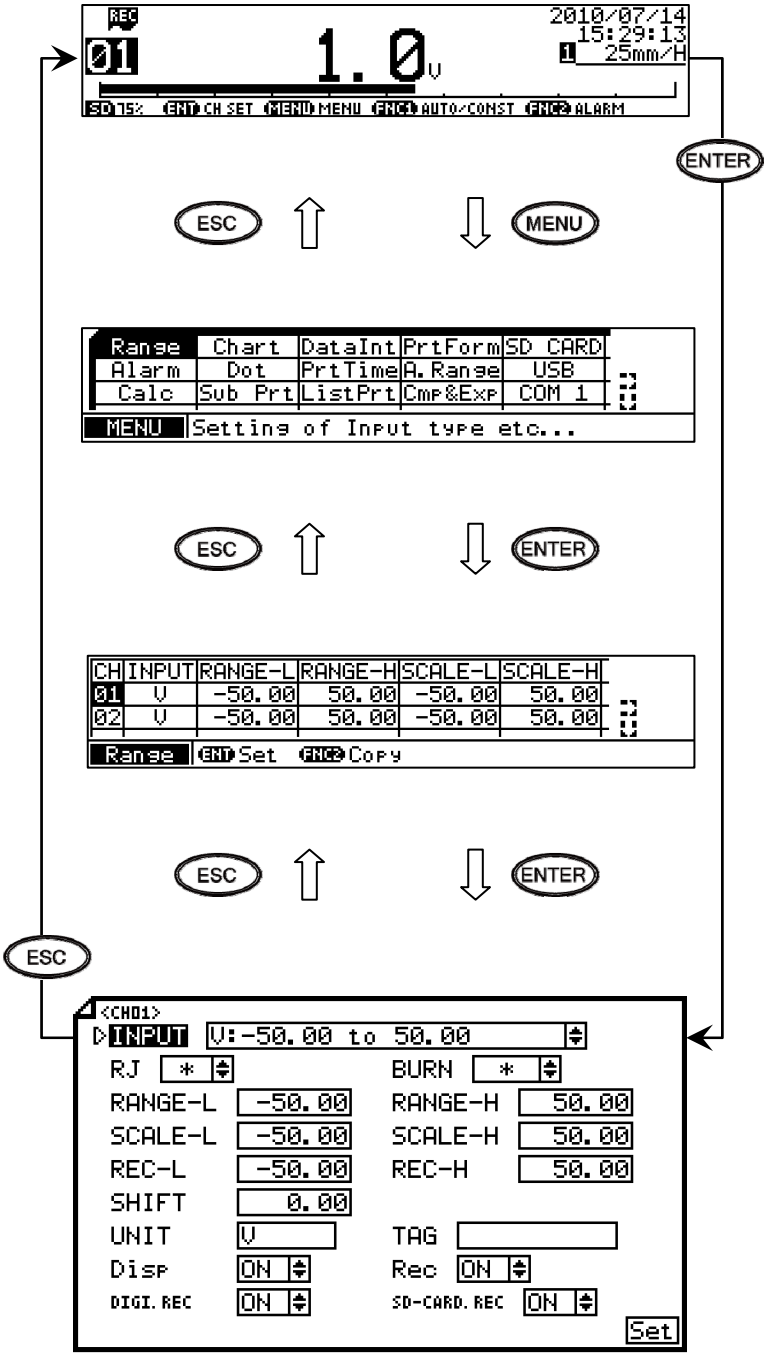

Note: Actual windows are separated. Use the ▲/▼ keys to scroll and continue settings.

(1) Pressing the MENU key displays the menu window (list of setting items).

(2) Select “Range”.
(Set contents of all channels will be displayed.)

(3) Move the cursor to the target CH with the ▲/▼ keys and press the ENTER key. The cursor does not move to parameters other than CH.
Pressing the FUNC2 key on this window displays the copy window for input type settings. (See the next page for “Copying settings”.)

(4) Move the cursor to a parameter to be set with the ▲/▼/◀/▶ keys.

(5) Press the ENTER key to make it available for setting and then select or enter a value.

(6) After completing the settings of this item, move the cursor to Set.

(7) Press the ENTER key to register the settings (when chart recording is ON, a setting change mark is printed). To cancel the settings, press the ESC key.

Reference **Parameter settings**

CH No. is fixed to the one selected from the list of set contents. The input type, RJ, burnout and ON/OFF of each display/recording are set by selecting a value from options with the ▲/▼ keys. The upper/lower limit of range, scale and chart recording, and sensor correction are set by selecting a numeric value at each digit with the ▲/▼ keys. The unit and tag are set by selecting arbitrary characters on the window.

[List of Range setting parameters]

Parameter	Function	Default	Set value
INPUT	Select input type	V: -50.00 to 50.00	V, MV, K, E, J, T, R, S, B, N, U, L, WWRe26, WRe5-26, NiMo-Ni, PlatineI2, PtRh40-20, Cr-AuFe, Au/Pt, Pt100, QPt100 (old Pt100), JPt100, Pt50, Pt-Co, UNUSED
RJ	Select whether to use reference junction compensation contact	*	EXT (external), INT (internal)
BURN	Select whether to detect burnout, and action at detection	*	None, UP, DOWN
RANGE-L	The lowest end of measuring range used within the range (measuring range) determined by the input type	-50.00	-30000 to 30000 Up to three digits after decimal point can be set. Example: -30.000 The same decimal point position is used for the lowest/highest range.
RANGE-H	The highest end of measuring range used within the range (measuring range) determined by the input type	50.00	
SCALE-L	The lowest end of scaling range specified when selecting the voltage range (mV, etc.) for input type	-50.00	-30000 to 99999 Up to three digits after decimal point can be set. Example: -30.000 The same decimal point position is used for the lowest/highest scaling range.
SCALE-H	The highest end of scaling range specified when selecting the voltage range (mV, etc.) for input type	50.00	
REC-L	Lowest end of chart recording (left)	-50.00	-30000 to 99999 Up to three digits after decimal point can be set. Example: -30.000 The same decimal point position is used for the lowest/highest recording range.
REC-H	Highest end of chart recording (right)	50.00	
SHIFT	Sensor correction Set offset value to the data after scaling	0.00	-30000 to 99999 Up to three digits after decimal point can be set. Example: -30.000
UNIT	Set a character string of up to six characters	V	
TAG	Set a character string of up to 10 characters	Not set	
Disp	Select ON or OFF for measured value display	ON	ON, OFF
Rec	Select On or OFF for trace printing	ON	ON, OFF
DIGI.REC	Select On or OFF for digital recording/printing	ON	ON, OFF
SD-CARD.REC	Select On or OFF for SD card recording	ON	ON, OFF

3. Copying settings

Pressing the FUNC2 key on the list of set contents displays the copy window for channel settings.
Move the cursor to the item you want to copy with the ▲/▼/◀/▶ keys.

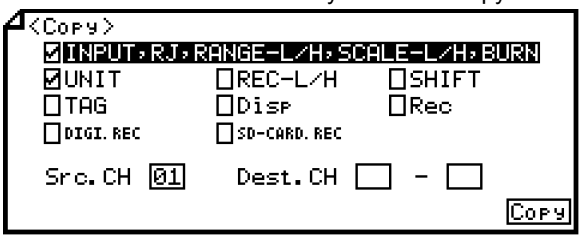

Press the ENTER key to check ☑ the check box of desired item.

After selecting items to be copied, specify the source and destination. Move the cursor to the source (Src.CH) and select CH with the ▲/▼ keys (forward/reverse) and then press the ENTER key to register. When the cursor moves to the destination (Dest.CH), select CH likewise. Settings can be copied to specified channels collectively.
When the destination setting is completed, move the cursor to Copy and press the ENTER key to start copying.

Note **Influence on other settings**

When parameters like input type and scale upper/lower limit are changed in input type settings, it may affect other settings (alarm settings/deadband, etc.).
Please bear this in mind since copying these parameters may also affect other settings.

4. Shortcut for input type settings

Only for input type settings, a setting window of each channel can be displayed from the measured value display window. While using the 1-point, 1-point + bar, 6-point, 12-point or 24-point display mode, highlight the channel number you want to set with the ▲/▼/◀/▶ keys and press the ENTER key. For the case of 1-point display, pressing the ENTER key brings the parameter setting window of the displayed channel.

* Copy function is unavailable on a setting window displayed using shortcut.

8-3. Alarm Settings “Alarm”

Various alarm points can be set for measured value of each channel. Up to four alarm points per channel can be set and the type of alarm (upper/lower, diff upper/lower, or rate-of-change upper/lower) can be set to each alarm point arbitrarily. Using the alarm settings, alarm printing, alarm display, status LED indication and relay output can be performed.
Alarm output (relay output) provides up to 24 points when option is used.

1. Display and print at alarm activation/reset

When alarm is activated, the “ALM” status LED and measured value of the channel generating the alarm will start flashing.

Pressing the FUNC2 key displays details of the alarm and a list of active alarms.

Also, “alarm type”, “alarm level” and “alarm activation time” of the alarm generating channel are printed at the far right of chart, and “alarm level” and “alarm reset time” are printed when the alarm is reset.

The maximum number of printing tasks of alarm activation/reset held by the unit is 48. Further printing tasks of alarm activation/reset cannot be accumulated. When 48 is exceeded, ▲mark is printed right at the level.

Example of chart printing at alarm activation

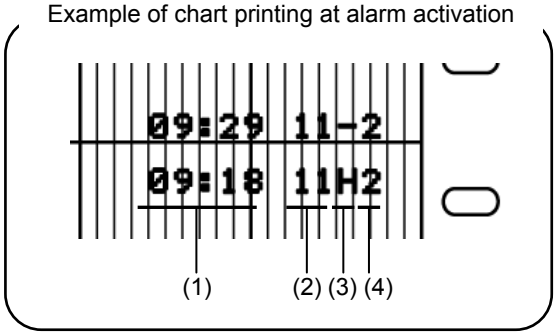

Reset	(1) Time (2) CH (3) – (hyphen) (4) Level

Activated	(1) Time (2) CH (3) Alarm type (4) Level

2. Alarm setting parameters

The alarm function does not work initially since it is not set prior to shipment.

1) Alarm point (alarm type and alarm value)
Alarm type (upper/lower, diff upper/lower or rate-of-change upper/lower) and alarm point can be set for up to four levels per channel at arbitrary points.

2) Alarm deadband
Alarm is activated when a measured value reaches an alarm value (see right figure).
Alarm reset point can be set at a point toward the normal range, and the area between the alarm activation and reset points is called alarm deadband.
The setting range is the same as the scale setting.

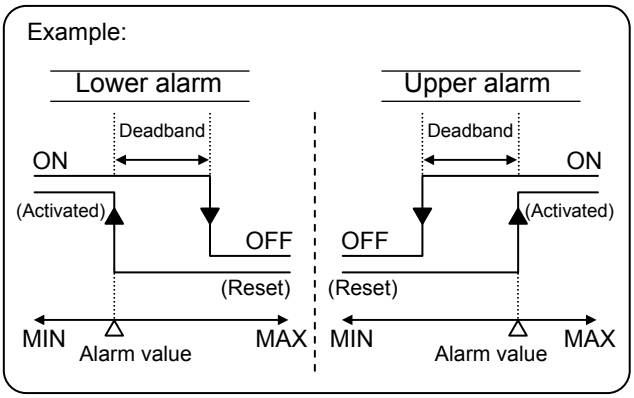

3) Compared CH (for diff upper/lower alarm only)
Specify a comparison target CH when using diff upper/lower alarm.

4) Reference period (for rate-of-change upper/lower alarm only)
Specify a period for comparing the amount of change.
(See the next section for alarm type.)

5) Delay
Output delay time (Delay) can be set for each channel and level. Alarm is activated when a specified delay time passes after alarm condition is detected. If the alarm condition is cleared during the delay period, alarm will not be activated.

6) Output

Alarm condition (activation/reset) at each alarm point is output from the relay of the specified No. (alarm output terminal No.). This output is not performed initially because it is set to "-" prior to shipment.
Output relay can be specified arbitrarily for each channel and level (from No.1 to 24 relay: optional). When "99" is specified, internal circuit output can be performed instead of relay output. The internal ON/OFF signal can be used as a trigger for SD card recording or mail sending (optional).

7) Output mode (AND/OR)

Select the circuit type (AND/OR) for output. Multiple alarm points can be assigned to one relay No.

AND output:.... Relay turns ON when all the assigned alarm points generate alarm.

OR output:..... Relay turns ON when any of the assigned alarm points generates alarm.

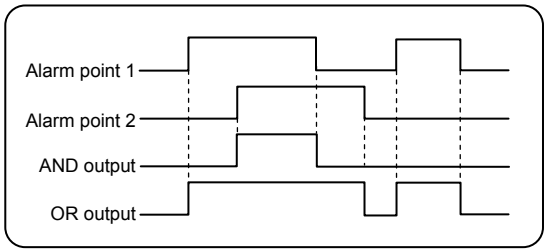

8) Holding/not holding conditions of measured value display, status LED and relay output at alarm activation

When alarm is activated, the measured value and "ALM" start flashing. When the alarm is reset, the measured value stops flashing and "ALM" is turned off (they keep flashing when alarm display and relay output is held).
You can stop flashing of measured value and status LED from the alarm status check window if the alarm has been reset. When remote contact is selected as a reset method, specify the remote contact No. which executes a reset (Hold-EX).

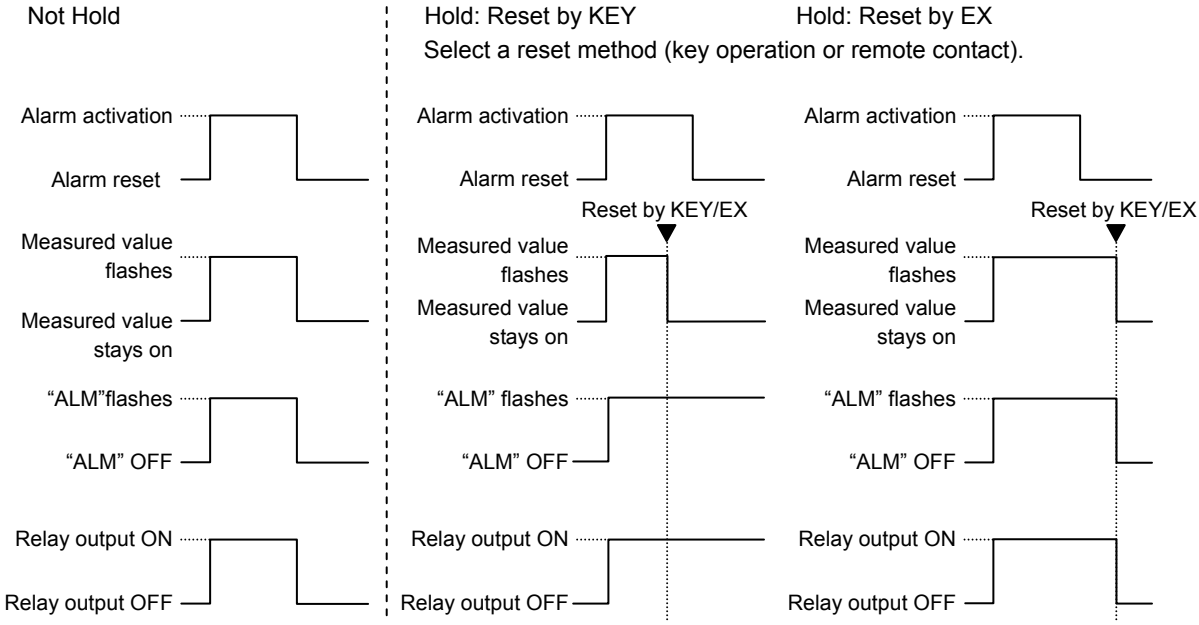

Note **Alarm confirmation and output status**

The status LED and output cannot be reset while alarm is activated. Even when alarm is reset, the condition of display, status LED and output at alarm activation are held. Specify a reset method for these items.

3. Alarm type

Alarm type can be selected from the following six types for each alarm point.

1) Upper limit alarm (H)
Alarm is activated when the measured value of specified channel reaches or exceeds an alarm value.
Set value ····· alarm value, deadband
Activation condition ····· specified CH data ≥ alarm value
Reset condition ····· specified CH data < (alarm value – deadband)

2) Lower limit alarm (L)
Alarm is activated when the measured value of specified channel reaches or falls below an alarm value.
Set value ····· alarm value, deadband
Activation condition ····· specified CH data ≤ alarm value
Reset condition ····· specified CH data > (alarm value + deadband)

3) Difference upper limit alarm (B)
Alarm is activated when the difference calculated by subtracting the measured value of compared channel from the measured value of specified channel reaches or exceeds an alarm value.
Set value ····· alarm value (absolute value), compared CH, deadband
Activation condition ····· (specified CH data – compared CH data) ≥ alarm value
Reset condition ····· (specified CH data – compared CH data) < (alarm value – deadband)

4) Difference lower limit alarm (S)
Alarm is activated when the difference calculated by subtracting the measured value of compared channel from the measured value of specified channel reaches or falls below an alarm value.
Set value ····· alarm value (absolute value), compared CH, deadband
Activation condition ····· (specified CH data – compared CH data) ≤ alarm value
Reset condition ····· (specified CH data – compared CH data) > (alarm value – deadband)

5) Rate-of-change upper limit alarm (U)
Alarm is activated when the measured value variation width of specified channel in the reference period [Δt sec] is at the plus side and equal to or higher than an alarm value.
Set value ····· alarm value (absolute value), reference period [Δt sec], deadband
The reference period is set within the range of 0 to 6000sec. Alarm judgment cycle is as follows:
Judgment cycle
6 points (Measuring interval is 1sec)
Δt ≤ 10 at the time of setting: 1sec
Δt > 10 at the time of setting: Δt/10sec (rounding up to whole number)
12 points, 24 points (Measuring interval is 2sec)
Δt ≤ 20 at the time of setting: 2sec
Δt > 20 at the time of setting: Δt/10sec (rounding up to whole number)

6) Rate-of-change lower limit alarm (D)
Alarm is activated when the measured value variation width of specified channel in the reference period [Δt sec] is at the minus side and equal to or higher than an alarm value.
Set value ····· alarm value (absolute value), reference period [Δt sec], deadband
The reference period is set within the range of 0 to 6000sec. Alarm judgment cycle is as follows:
Judgment cycle
6 points (Measuring interval is 1sec)
Δt ≤ 10 at the time of setting: 1sec
Δt > 10 at the time of setting: Δt/10sec (rounding up to whole number)
12 points, 24 points (Measuring interval is 2sec)
Δt ≤ 20 at the time of setting: 2sec
Δt > 20 at the time of setting: Δt/10sec (rounding up to whole number)

Rate-of-change alarm

Upper alarm: Variation width per unit time [Δt] (PV2 - PV1) is at plus side.
Lower alarm: Variation width per unit time [Δt] (PV2 - PV1) is at minus side.

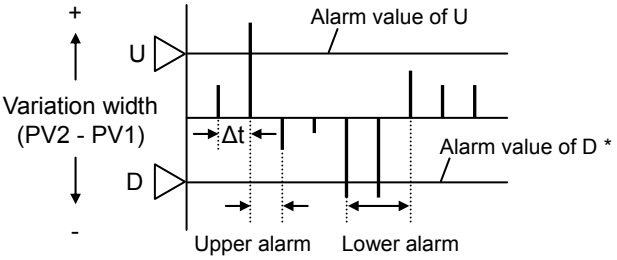

Differential alarm

(Diff upper alarm)

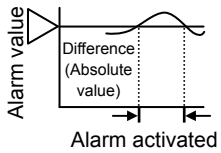

(Diff lower alarm)

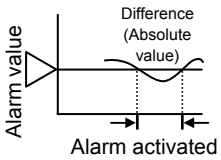

Difference in measured value (absolute value) ≥ alarm value: diff upper alarm activated
Difference in measured value (absolute value) ≤ alarm value: diff lower alarm activated

4. Parameter settings

(1) Pressing the MENU key displays the menu window (list of setting items).

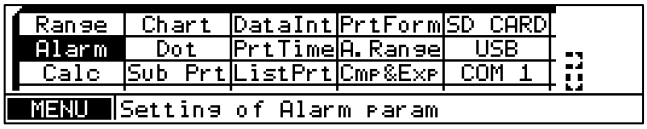

(2) Select “Alarm”.

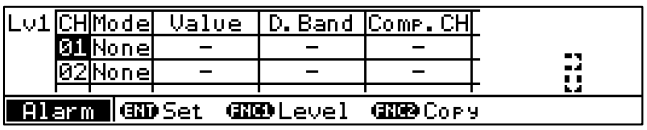

(3) Move the cursor to the target channel with the ▲/▼ keys and press the ENTER key. The cursor does not move to parameters other than CH.
Pressing the FUNC1 key on this window allows you to change the alarm level.
Pressing the FUNC2 key displays the copy window for alarm settings.

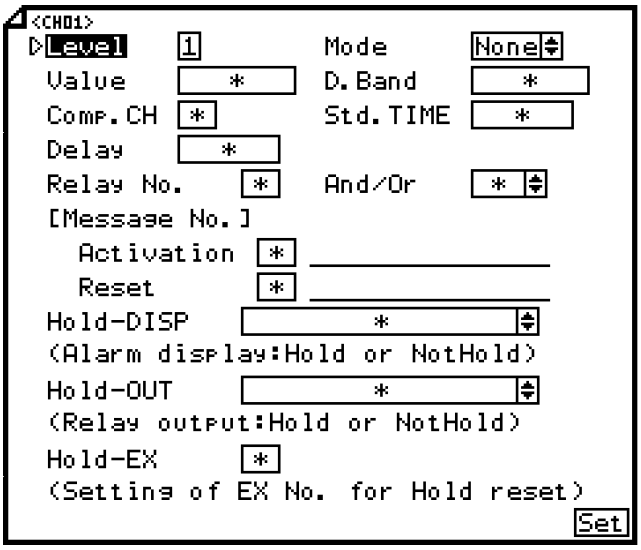

(4) Move the cursor to the parameter to be set with the ▲/▼/◀/▶ keys.
(5) Press the ENTER key to make it available for setting and then select or enter a value.
(6) After completing the settings of this item, move the cursor to Set.
(7) Press the ENTER key to register the settings (when chart recording is ON, a setting change mark is printed). To cancel the settings, press the ESC key.

Note: Actual windows are separated. Use the ▲/▼ keys to scroll and continue settings.

Note **Relation with the decimal point position of scale set value**

The decimal point position of alarm value/deadband is linked to that of scale set value. Therefore, when the decimal point position of scale is changed in “8-2. Input Type Settings”, the decimal point position of alarm value/deadband will also be changed. Also, alarm deadband is set to an absolute value.

[List of Alarm setting parameters]

Parameter	Function	Default	Set value
Level	Select level for setting		1 to 4
Mode	Select alarm type	None	None, H (upper), L (lower), B (diff upper), S (diff lower), U (rate-of change upper), D (rate-of-change lower)
Value	Set alarm judgment value	*	-30000 to 99999 Decimal point position is the same as scale setting.
D.Band	Set alarm deadband	*	0 to 99999 Decimal point position is the same as scale setting.
Comp.CH	Set CH (reference CH) compared with the setting CH (Diff upper/lower alarm only)	*	1 to 24 "-" Not set
Std.TIME	Set reference period for calculating variation width (rate-of-change upper/lower alarm only)	*	0 to 6000 Minimum set value is 1sec. Set period can be narrower than measuring interval. In this case, alarm judgment is made using the measuring interval.
Delay	Set delay time to output after alarm detection	*	0 to 6000 Minimum set value is 1sec.
Relay No.	Specify output relay No.	*	- (No output), 99 (internal circuit output), 1 to 24
And/Or	Select circuit type for output	*	And, Or
Message No. Activation	Specify message No. printed at alarm activation	*	- (Message not printed at alarm activation), 1 to 20
Message No. Reset	Specify message No. printed at alarm reset	*	- (Message not printed at alarm reset), 1 to 20
Hold-DISP	Select whether to hold the status of display and "ALM" status LED at alarm activation	*	Not Hold, Hold:Reset by KEY (hold until reset by key operation) Hold:Reset by EX (hold until reset by remote contact)
Hold-OUT	Select whether to hold the status of alarm output at alarm activation	*	Not Hold, Hold:Reset by KEY (hold until reset by key operation) Hold:Reset by EX (hold until reset by remote contact)
Hold-EX	Specify remote contact No. used when "Hold:Reset by EX" is selected for "Hold-DISP" or "Hold-OUT"	*	- (Not used), 1 to 20 If alarm condition is cleared, on-hold alarm output status is reset when the specified remote contact No. turns ON.

5. Copying settings

Pressing the FUNC2 key on the list of alarm set contents displays the copy window for alarm settings.
Move the cursor to the alarm level you want to copy with the ▲/▼/◀/▶ keys.

Press the ENTER key to check ☑ the check box of desired alarm level.

After selecting alarm levels to be copied, specify the source and destination. Move the cursor to the source (Src.CH) and select CH with the ▲/▼ keys (forward/reverse) and then press the ENTER key to register. When the cursor moves to the destination (Dest.CH), select CH likewise.
Settings can be copied to specified channels collectively.
When the destination setting is completed, move the cursor to Copy and press the ENTER key to start copying.

Reference **About alarm level**

A level selected for copying alarm settings includes all the parameters set for the level.

6. Checking alarm status

You can check if alarm is activated on the measured value display window which is normally displayed. However, to check the detail of activated alarm (alarm type, level, etc.), press the FUNC2 key on the measured value display window to open the alarm status check window.

The alarm status check window consists of the alarm status check window per channel, calendar timer ON/OFF check window and fail output status check window. Use the ◀/▶ keys to switch the window.

- Per-channel alarm status check window

CH	DATA	Lv1	Lv2	Lv3	Lv4
01	12.34	H/Hold	H/Hold	H/Hold	H/Hold
02	2.0	H/Hold	L		

ALM Chk | FNC1 Reset FNC2 Update 09:48:38

Select the channel you want to check.
The cursor does not move to parameters other than CH.

The current alarm status is listed on the window.

For a channel to which the alarm output and display are set to “Hold”, information during alarm activation (measured value and alarm type) is displayed even after the alarm condition is cleared. At this time, “Hold” is shown on the window.

When alarm condition is cleared on the channel selecting “Hold” for alarm output and display and “KEY” as a reset method (Hold:Reset by KEY), select the channel with the ▲/▼ keys and press the FUNC1 key to reset the Hold status.

This alarm status check window contains the information obtained at the time the FUNC2 key is pressed on the measured value display window. To view the latest information, press the FUNC2 key on the alarm status check window.

You can also change "alarm settings" from this window. When a CH No. is selected by the ENTER key, the setting window of alarm parameters will be displayed.

- Calendar timer ON/OFF check window

No.	Timer ON	Timer OFF
01	2010/07/01 10:30	2010/07/01 15:30

ALM Chk | FNC1 Reset

This window shows the timer ON No. (set time has already passed), set time (Timer ON) and scheduled reset time (Timer OFF).

Pressing the FUNC1 key can reset the Timer ON status.

- Fail output status check window

Infomation of the Fail
[Chart End] [Burn]
[SD Card] [Battery] [System Error]

ALM Chk

This window shows a failed status (chart end, disconnection of input, SD card capacity low, backup battery level low or other system error).

* To enable the above display, you need to select “LCD” for each item according to “8-23. Fail Output Settings”.

8-4. Calculation Settings “Calc”

Configure calculation settings to perform arbitrary calculation for each individual channel. Each calculation is performed at the same intervals as input.
Data (including communications input) is processed according to the calculation settings except when the "calculation type (Kind)" is set to “None”. The processed data is displayed/recorded as each channel data. Also, alarm judgment is made on the processed data.
There are 15 types of calculation including “None”. When you select “Formula” or “BrokenLine”, you need to set corresponding parameters described in “8-5. Formula Settings” or “8-6. Broken Line Approximation Table Settings”.

1. Calculation types and set parameters

Kind	Formula	Set parameter
None	None	None
Arithmetic 1 (MUL)	Ax + By + Cxy + D A, B, C, D: constant x, y: channel data	Decimal point position for result Constant (A, B, C, D) Channel No. of data (x, y)
Arithmetic 2 (DIV) *1	Ax ÷ y + B A, B: constant x, y: channel data	Decimal point position for result Constant (A, B) Channel No. of data (x, y)
Natural logarithm (LOGe)	LOGex x: channel data	Decimal point position for result Channel No. of data (x)
Common logarithm (LOG10)	LOG10x x: channel data	Decimal point position for result Channel No. of data (x)
Exponent (Power)	e^x x: channel data	Decimal point position for result Channel No. of data (x)
Extraction of square root (Root) *2	$(Ss - Sz)\sqrt{\frac{Rx - Rz}{Rs - Rz}} + Sz$ Rx: channel data (input voltage, etc.) Rs: range upper limit Rz: range lower limit Ss: scale upper limit Sz: scale lower limit	Decimal point position for result Channel No. of data (Rx)
Humidity	Calculated from measured value of dry bulb (x) and wet bulb (y) using relative humidity table x, y: channel data	Decimal point position for result Channel No. of data (x, y)
Max value (High-Peak)	Maximum measured value (x) in an interval	Decimal point position for result Interval Start time Channel No. of measured value (x)
Min value (Low-Peak)	Minimum measured value (x) in an interval	
Avg value (Avarage)	Average measured value (x) in an interval	
Integration (INT)	See “8-4.4. Integration”	
COM.Input	Communications input data (last updated communications input data regardless of communication type) Preset calculation cannot be performed for communications input data, but calculation using “Formula” is available.	Decimal point position for result Data communications channel No. (Reference No. is assigned to each CH.)
Formula	Arbitrarily entered formula	Decimal point position for result Formula (interval, start time, unit of integration* and integration reset method* and integration reset by remote contact ON*) * These become effective when “integration” is specified in a formula.
Broken line approximation (BrokenLine)		Decimal point position for result Broken line approximation table Channel No. of data (x)

*1: If a measured value y is 0, the following value is obtained depending on Ax value.
Ax > 0: OVER Ax = 0: 0 Ax ≤ 0: -OVER
*2: This formula is used when the measured input voltage (Rx) is 1% or more of the set range (Rs – Rz).
When it is less than 1%, the scale lower limit (Sz) is used.

2. Channels specifying calculation

For channels specifying calculation, data after processing the specified calculation is recorded or displayed.

3. Calculating max/min/avg value

1) Calculation reset
   Calculation is reset automatically at specified intervals. Therefore the maximum, minimum and average values are calculated in each interval.

2) Start time of calculation
   This is valid for the first calculation after setting only. Calculation is not performed and waited until start time. The calculated data during this waiting period is invalid.

4. Integration

Integration operation can be processed on measured value of each channel and the result can be displayed/recorded.
For a channel No. selecting integration, an alarm value is set for calculated (integrated) value.

The data (calculation result) of a calculation set channel is obtained using the following formula.

$$INT_n = INT_{n-1} + \frac{(PV_n + PV_{n-1}) \times (T_n - T_{n-1})}{2} \div \text{Time Unit}$$

INT_n: Integration value
INT_{n-1}: Last integration value
PV_n: Current measured value *1
PV_{n-1}: Last measured value *1
T_n: Current measurement time [sec]
T_{n-1}: Last measurement time [sec]
Time Unit: Unit of time: 3600, Min: 60, Sec: 1

*1: When the scale width is exceeded, the value at the maximum/minimum scale is used.

1) Resetting integration

   (1) Reset by remote contact
   When using remote contacts (optional), a start and reset of integration can be executed with an remote contact signal. When a calculation is started by an remote contact reset, integration value will be reset at set intervals.
   (See “13-1. External Operation Settings”.)
   (2) Reset after specified interval
   After integration operation is started, the integration value is reset automatically after a specified interval and then the operation is restarted.

2) Max integration value
   The maximum integration value is 99999 (it actually depends on the decimal point position of result: 99.999 to 99999). If integration value exceeds the maximum value, it will be reset to 0 and the integration operation continues.

5. Parameter settings

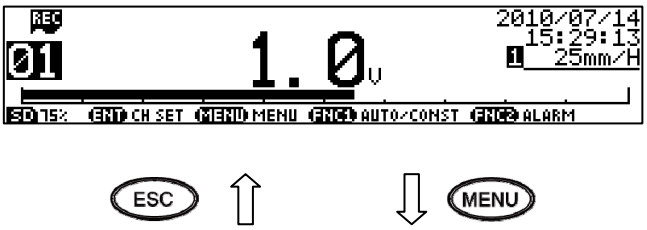

(1) Pressing the MENU key displays the menu window (list of setting items).

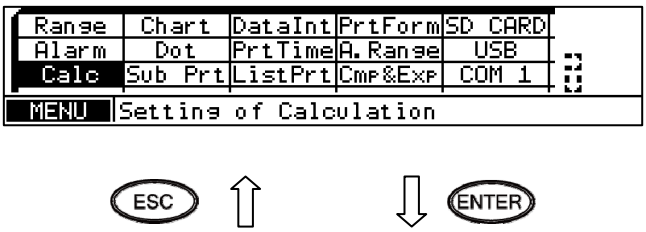

(2) Select “Calc”.

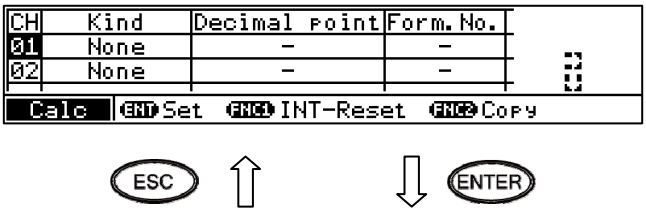

(3) Move the cursor to the target channel with the ▲/▼ keys and press the ENTER key. The cursor does not move to parameters other than CH.
Pressing the FUNC1 key on this window displays the integration reset window. Also, pressing the FUNC2 key displays the copy window for calculation settings.

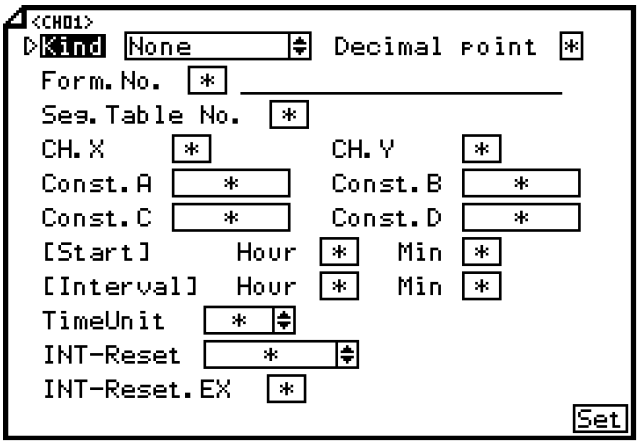

(4) Move the cursor to the parameter to be set with the ▲/▼/◀/▶ keys.
(5) Press the ENTER key to make it available for setting and then select or enter a value.
(6) After completing the settings of this item, move the cursor to Set.
(7) Press the ENTER key to register the settings (when chart recording is ON, a setting change mark is printed). To cancel the settings, press the ESC key.

Note: Actual windows are separated. Use the ▲/▼ keys to scroll and continue settings.

[List of Calc setting parameters]

Parameter	Function	Default	Set value
Kind	Select calculation type	None	None, Root (square root), LOGe (natural logarithm), LOG10 (common logarithm), INT (integration), Humidity, COM.Input (data communications input), MUL (arithmetic 1), DIV (arithmetic 2), High-Peak (max value), Low-Peak (min value), Average, Power (exponent), Formula, BrokenLine (broken line approximation)
Decimal point	Set decimal point position for result	*	0 to 3
Form.No.	Specify formula No. when “Formula” is selected for Kind	*	- (None), 1 to 12
Seg.Table No.	Specify broken line table No. when “BrokenLine” is selected for Kind	*	- (None), 1 to 6
CH.X	Specify CH for X data used by each calculation	*	- (None), 1 to 24
CH.Y	Specify CH for Y data used by each calculation	*	- (None), 1 to 24
Const.A	Set calculation constant A when arithmetic 1 or 2 is selected for Kind	*	-30000 to 99999 Up to three digits after decimal point can be set. Example: -30.000
Const.B	Set calculation constant B when arithmetic 1 or 2 is selected for Kind	*	-30000 to 99999 Up to three digits after decimal point can be set. Example: -30.000
Const.C	Set calculation constant C when arithmetic 1 is selected for Kind	*	-30000 to 99999 Up to three digits after decimal point can be set. Example: -30.000
Const.D	Set calculation constant D when arithmetic 1 is selected for Kind	*	-30000 to 99999 Up to three digits after decimal point can be set. Example: -30.000
[Start]	Set calculation start time Calculation is waited until set time (data during the waiting period is invalid).	*	- (None), 00 : 00 to 23 : 59 When “-“ is set, following operations are performed. Integration: Operated by external reset Formula: Operated at power-on or immediately after setting is made
[Interval]	Set calculation interval For calculations using integration, integration value is reset at set intervals.	*	- (None), 00 : 00 to 24 : 59 Setting “-“ or “00 : 00” disables interval.
TimeUnit	Unit of integration time	*	Hour, Min, Sec
INT-Reset	Set integration reset method for calculations using integration	*	None (reset not performed), Interval (specified interval), EX (All) (all reset by remote contact), EX (individual reset by remote contact)
INT-Reset.EX	Specify remote contact No. used when “EX” is selected for "INT-Reset"	*	- (None), 1 to 20

8-5. Formula Settings “Formula”

Set a formula used when “Formula” is selected for Kind in "calculation settings".
Up to 12 formulas, which are shared by all channels, can be registered using a character string consisting of 50 characters at maximum.

1. Calculation type

Arithmetic operation

Four arithmetic operations are performed.

	Symbol	Example	Note
Addition	+	*X* **+** *Y*	
Subtraction	-	*X* **-** *Y*	
Multiplication	*	*X* ***** *Y*	
Division	/	*X* **/** *Y*	
Remainder	%	*X* **%** *Y*	
Power	^	*X* **^** *Y*	

* *X* and *Y* represent formula or numeric value.

Comparison operation

Result is expressed by 1 (true) or 0 (false).

	Symbol	Example	Note
Equal	==	*X* **==** *Y*	
Unequal	!=	*X* **!=** *Y*	
Greater than	>>	*X* **>>** *Y*	
Less than	<<	*X* **<<** *Y*	
Greater than or equal to	>=	*X* **>=** *Y*	
Less than or equal to	<=	*X* **<=** *Y*	

* *X* and *Y* represent formula or numeric value.

Logical operation

Logical operation is performed and either 1 or 0 is returned as a result.

	Symbol	Example	Note
Logical AND	AND	*X* **AND** *Y*	Parenthesize formula target
Logical OR	OR	*X* **OR** *Y*	Parenthesize formula target
Exclusive OR	XOR	*X* **XOR** *Y*	Parenthesize formula target
Negation	NOT	***NOT(X)***	Parenthesize negation target

* *X* and *Y* represent formula or numeric value. *X* and *Y* should indicate 0 or 1.

General calculation functions

Function calculation is performed.

	Symbol	Example	Note
Round up to whole number	CEL	***CEL(X)***	
Round down to whole number	FLR	***FLR(X)***	
Absolute value	ABS	***ABS(X)***	
Square root	SQR	***SQR(X)***	
Power of e	EXP	***EXP(X)***	
Natural logarithm (bottom e)	LOG	***LOG(X)***	
Common logarithm (bottom 10)	LOG10	***LOG10(X)***	

* *X* represents formula or numeric value.

Channel data calculation functions

Function calculation is performed.
An error occurs when measured data contains error data (±OVER, etc.).

	Symbol	Example	Note
Input data	CH	***CH(X)***	*X*: Channel No.
Calculation result	PCH	***PCH(X)***	
Previous result	OCH	***OCH(X)***	Data at the last scan (0.1sec before)
Integration	ITG	***ITG(X)***	See “2. Integration”
24-hour integration	ITG24	***ITG24(X)***	See “2. Integration”
F value	FV	***FV(X#To#Z#R)***	See “3. F value”
Relative humidity	RH	***RH(D#W)***	See “4. Relative humidity”
Dew-point temp	DEW	***DEW(T#H)***	See “5. Dew-point temperature”
Moving average	AVE	***AVE(X#T)***	See “6. Moving average”
Past data	OLD	***OLD(X#T)***	See “7. Past data”
First-order lag filter	IIR	***IIR(X#T)***	See “8. First-order lag filter”
Increment per unit time	PLS	***PLS(X#T)***	See “9. Increment per unit time”

* *X* represents channel number.

* When a formula specifies a calculation result in it and the specified channel No. is larger than the calculating channel No., the last calculation result will be used.

Function to get system information

	Symbol	Example	Note
SD card remaining amount	SD	***SD(A)***	A = unit of remaining amount 0: %

Other functions

	Symbol	Example	Note
Wind display	AZI	***AZI(A)***	See “10. Wind display”
Broken line approximation	LIC	***LIC(A)***	See “11. Broken line approximation”
Remote contact input	DIN	***DIN(A)***	A = Remote contact terminal No. Open: 0 Short: 1

2. Integration

The ITG or ITG24 function is used to perform integration operation.
The integration function cannot be used more than once in a formula. Ignoring this causes erroneous calculation.
Combining with another type of calculation is possible.

Example: ~~ITG(1) + ITG(2)~~ ~~ITG24(1) - ITG(1)~~ ITG(1) / 100

Integration value is reset at every start time and interval specified in "calculation settings" for ITG function, and at every start time for ITG24 function.

1) Normal integration
Integration value is reset at every reference time and interval.
Entering a formula
ITG(X)
X: Channel No. of integration target

Calculation detail
$D_n = D_{n-1} + \{(PV_n + PV_{n-1}) \times (T_n - T_{n-1})\} \div 2$
D_n: Integration result D_{n-1}: Last integration result
PV_n: Integration target data PV_{n-1}: Last integration target data
T_n: Calculation time T_{n-1}: Last calculation time

If error data (±OVER, etc.) is included, calculation will not be performed and the last result will be valid.

2) 24-hour integration
Integration value is reset only at reference time(start time).

Entering a formula
ITG24(X)
X: Channel No. of integration target

Calculation detail is the same as normal integration.

3. F value

Entering a formula
FV(X#To#Z#R)
X: Channel No. of calculation target, To: Reference temperature for F value calculation, Z: Z value, R: Start temperature for F value calculation

F value is obtained from the following calculation.
$\int 10^A dt$ where $A = (T - To) \div Z$ T: Calculation target channel data

When T value exceeds R value, F value will be reset to 0.

4. Relative humidity

Entering a formula
RH(D#W)
D: Channel No. of dry bulb temperature, W: Channel No. of wet bulb temperature

Relative humidity is obtained from the following formula.
$((B - 0.000662 \times 1013.0 \times (Ddata - Wdata)) \div A) \times 100$
A: Dry bulb saturated water vapor pressure, B: Wet bulb saturated water vapor pressure, Ddata: Dry bulb temperature, Wdata: Wet bulb temperature

The following formula is used to obtain a value of saturated water vapor pressure.
$6.1121 \times EXP((17.502 \times T) \div (240.9 + T))$ T: Temperature

5. Dew-point temperature

Entering a formula

DEW(T#H)

T: Channel No. of temperature data, H: Channel No. of relative humidity

Dew-point temperature is obtained from the following calculation.

t: Temperature data
h: Relative humidity data
D: Dew-point temperature

(1) K = t + 273.15
(2) When t ≥ 0:
W = EXP (-5800.2206 / K + 1.3914993 + K x (-0.048640239 + K x (0.41764768E-4 - 0.14452093E-7 x K)) + 6.5459673 x LOG(K)) / 1000
When t < 0:
W = EXP (-5674.5359 / K + 6.3925247 + K x (-9.677843E-3 + K x (0.62215701E-6 + K x (0.20747825E-8 - 9.484024E-13 x K))) + 4.1635019 x LOG(K)) / 1000
(3) S = W x h / 100
(4) P = S x 1000
(5) Y = LOG(P)
(6) When P ≥ 611.2:
D = -77.199 + Y x (13.198 + Y x (-0.63772 + 0.071098 x Y))
When P < 611.2:
D = -60.662 + Y x (7.4624 + Y x (0.20594 + 0.016321 x Y))

6. Moving average

Entering a formula

AVE(X#T)

X: Data channel No., T: Time-line range [sec]

An average value in the past T seconds is calculated.

	AVE
Sampling period	1sec
T range	1 to 10sec (20sec for 12 or more input points)

7. Past data

Entering a formula

OLD(X#T)

X: Data channel No., T: Backward time [sec]

Data obtained T seconds before is acquired.

	OLD
Sampling period	1sec
T range	1 to 10sec (20sec for 12 or more input points)

8. First-order lag filter

Entering a formula

IIR(X#T)

X:Data channel No., T: Time constant [sec]

First-order lag filter calculation is processed on the channel X data.

Calculation detail

{dt ÷ (dt + t)} x (x – d) + d

dt: Sampling time　　t: Time constant

x: Current value of channel X　　d: Last calculation result

9. Increment per unit time

Entering a formula

PLS(X#T)

X: Data channel No., T: Unit time (1 to 10sec)

Increment per unit time is calculated. Specify a channel selecting integration operation for X.

When using PLS function, the data will be invalid when a reset of integration value occurs at a set time or by another reason except overflow (because the same process as overflow reset is performed internally). Formulate the operation in consideration of reset of integration value.

10. Wind display

Entering a formula

AZI(A)

A: Wind data

Wind display is made by converting numeric data into direction.
See the following table for the relation between wind data and displayed direction.
When A has a decimal fraction, the nearest direction will be displayed. Example: 1.2 → NNE

A	Display	A	Display
• • •	• • •	8	S
		9	SSW
		10	SW
-3	WNW	11	WSW
-2	NW	12	W
-1	NNW	13	WNW
0	N	14	NW
1	NNE	15	NNW
2	NE	16	N
3	ENE	17	NNE
4	E	18	NE
5	ESE	• • •	• • •
6	SE		
7	SSE		

Also, the scale of the channel selecting wind display as calculation type uses wind scale.

11. Broken line approximation

Entering a formula

LIC(X#A)

X: Data channel No.

A: Defined broken line approximation table No.

"Broken line approximation" can be added in a formula, and the first-order approximation can be performed for up to 30 broken lines.
Broken line is defined separately using up to six tables, and the table No. is specified in a formula (see “8-6. Broken Line Approximation Table Settings”).

Calculation is performed using the following formula according to the specified table parameters.
$A_n < X_1 < A_{n+1}$ $\{(B_{n+1} - B_n) / (A_{n+1} - A_n)\} \times (X_1 - A_n) + B_n$

12. Examples of combining different operations

- **(CH(1) * 3 – 20) / 6**
  (“Channel 1 raw data” x 3 - 20) ÷ 6

- **(CH(1) + CH(2)) << 300**
  Result will be 1 when the sum of channel 1 and channel 2 raw data is smaller than 300.

- **ABS(CH(1)) >= 50**
  Result will be 1 when the absolute value of channel 1 is greater than or equal to 50.

- **(PCH(1) >= 100) AND (PCH(2) <= 50)**
  Result will be 1 when the channel 1 data is greater than or equal to 100, and the channel 2 data is less than or equal to 50.

Note **Combination of functions**

Following functions cannot be combined together. Combining these functions causes calculation error.
ITG, ITG24, AVE, AVEH, OLD, OLDH, IIR
Example of formula which delivers a false result: AVE(OLD(1#10)#60)

13. Parameter settings

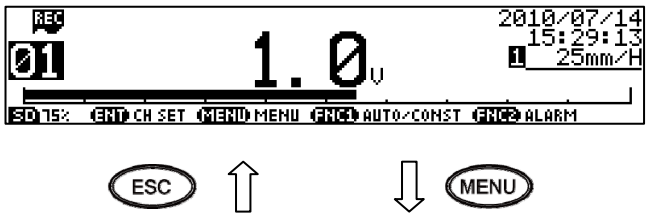

(1) Pressing the MENU key displays the menu window (list of setting items).

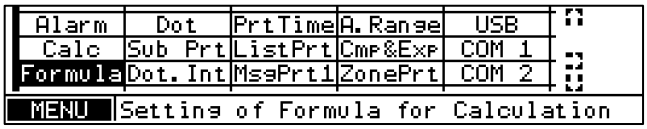

(2) Select “Formula”.

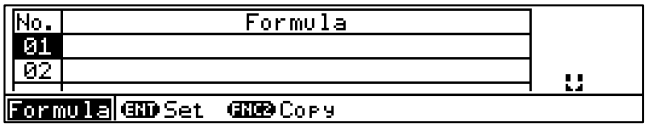

(3) Move the cursor to the target formula No. with the ▲/▼ keys and press the ENTER key. The cursor does not move to parameters other than formula No. Also, pressing the FUNC2 key on this window displays the copy window for formula settings.

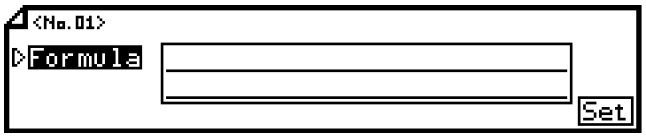

(4) Press the ENTER key to make it available for setting and then enter a formula.
(5) After completing the setting of this item, move the cursor to Set.
(6) Press the ENTER key to register the setting (when chart recording is ON, a setting change mark is printed). To cancel the setting, press the ESC key.

[Formula setting parameter]

Parameter	Function	Default	Set value
Formula	Set formula used when “Formula” is selected as "calculation type" using up to 50 characters	Not set	

8-6. Broken Line Approximation Table Settings “Seg.Tbl”

Set the table used when “BrokenLine” is selected as calculation type.
Up to six tables can be set, and up to 30 points can be set to each table. For channels selecting “BrokenLine” as calculation type, a table can be selected individually from six options.

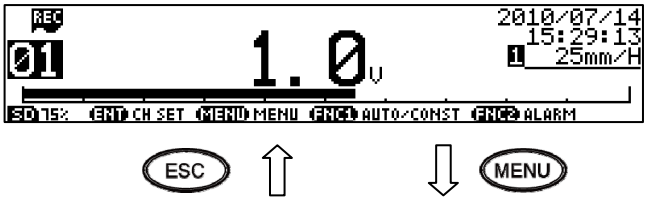

(1) Pressing the MENU key displays the menu window (list of setting items).

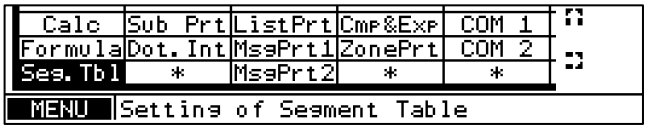

(2) Select “Seg.Tbl”.

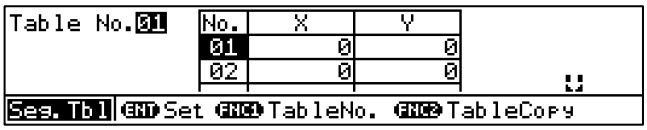

(3) Pressing the FUNC1 key advances the table number. Press the ENTER key to select the target table.
Also, pressing the FUNC2 key on this window displays the copy window for table settings.

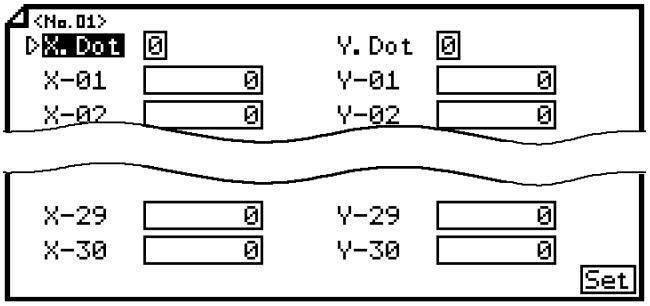

(4) Move the cursor to the parameter to be set with the ▲/▼/◀/▶ keys.
(5) Press the ENTER key to make it available for setting and then enter a value.
(6) After completing the settings of this item, move the cursor to Set.
(7) Press the ENTER key to register the settings (when chart recording is ON, a setting change mark is printed). To cancel the settings, press the ESC key.

[List of Seg.Tbl setting parameters]

Parameter	Function	Default	Set value
X.Dot	Set decimal point position of X axis factor	0	0 to 3
Y.Dot	Set decimal point position of Y axis factor	0	0 to 3
X-01 to X-30	Set X1 to X30 of broken line approximation table	-	- (Not set), -30000 to 99999 When “-“ is selected, subsequent X factor settings will be disabled.
Y-01 to Y-30	Set Y1 to Y30 of broken line approximation table	-	- (Not set), -30000 to 99999 When “-“ is selected, subsequent Y factor settings will be disabled.

8-7. Chart Speed Settings “Chart”

Set the chart speed. When using remote contacts (optional), see also “13-1. External Operation Settings”.

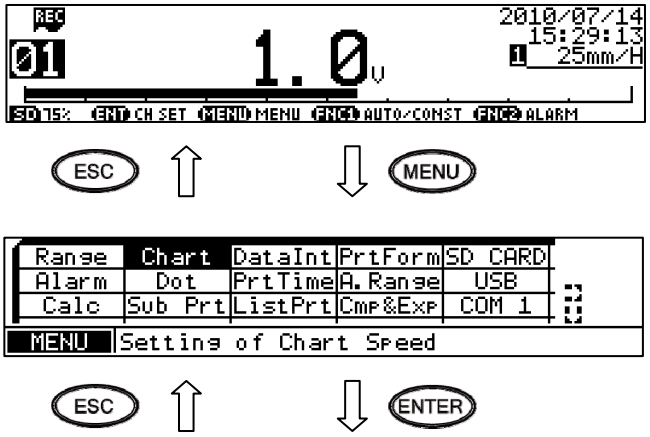

(1) Pressing the MENU key displays the menu window (list of setting items).

(2) Select “Chart”.

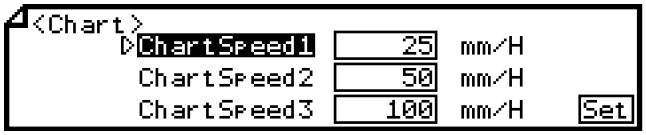

Note: “ChartSpeed2” and “ChartSpeed3” are displayed only when remote contacts (optional) are used.

(3) 3-speed setting is available only when using remote contacts (optional). Move the cursor to the chart speed to be set, and press the ENTER key to make it available for setting and then enter a value.
Set a desired speed within the range of 1 to 1500mm/H. It should be set in increments of 1mm/H, but 12.5mm/H is an exception.

(4) After completing the settings of this item, move the cursor to Set.

(5) Press the ENTER key to register the settings (when chart recording is ON, a setting change mark is printed). To cancel the settings, press the ESC key.

[List of Chart setting parameters]

Parameter	Function	Default	Set value
ChartSpeed1	Set chart speed 1	25mm/H	1 to 1500
ChartSpeed2 (optional)	Set chart speed 2	25mm/H	1 to 1500
ChartSpeed3 (optional)	Set chart speed 3	25mm/H	1 to 1500

Note 1 **Setting a speed at 251mm/H or higher**

All types of printing excluding dot printing, time line printing, power-on printing, data printing and list printing will be disabled.(See “6-3.3. Restrictions on recording”.)

8-8. Dot Printing Settings “Dot”

Whether to perform dot printing (ON/OFF) and the color used for it can be set for channels individually. Six colors are available for dot printing and it can be set arbitrarily.

(1) Pressing the MENU key displays the menu window (list of setting items).

(2) Select “Dot”.

(3) Move the cursor to the target channel with the ▲/▼ keys and press the ENTER key. The cursor does not move to parameters other than CH.
Also, pressing the FUNC1 key on this window restores the default colors for dot printing.
The recording status of the selected channel switches between ON and OFF every time the FUNC2 key is pressed.

(4) Move the cursor to the parameter to be set with the ▲/▼/◀/▶ keys.
(5) Press the ENTER key to make it available for setting and then select a value.
(6) After completing the settings of this item, move the cursor to Set.
(7) Press the ENTER key to register the settings (when chart recording is ON, a setting change mark is printed). To cancel the settings, press the ESC key.

[List of Dot setting parameters]

Parameter	Function	Default	Set value
Color	Select color for printing on chart	Six colors repeated	Red, Black, Blue, Green, Brown, Purple
Rec	Select ON/OFF for trace printing	ON	ON, OFF

8-9. Subtract Printing Settings “Sub Prt”

Subtract printing can be set using either of the following method: (1) use channel C data as difference between channel A and channel B, or (2) use channel E data as difference between channel D and a reference value.
Channels used for subtract printing are also used for normal measurement. Therefore, for 6-dot printing specification, channel 1 to 6 can be used for subtract printing.

Subtract printing						
	(1)	Channel C data	=	Channel A data	-	Channel B data
	(2)	Channel E data	=	Channel D data	-	Reference value

* For the case of type (1) above, the decimal point position depends on the channel data of minuend.

1. Setting chart recording range

Make sure to perform input type settings described in “8-2. Input Type Settings” before performing subtract printing (see Note 3).
“Difference value” is recorded as channel C or E data in subtract printing. Therefore, the chart recording range for subtract printing is required and it is set by specifying the upper and lower limits. Also, unit is set when needed.
It is necessary to estimate “difference value” beforehand to set the chart recording range.

Example of subtract printing between 2 channels

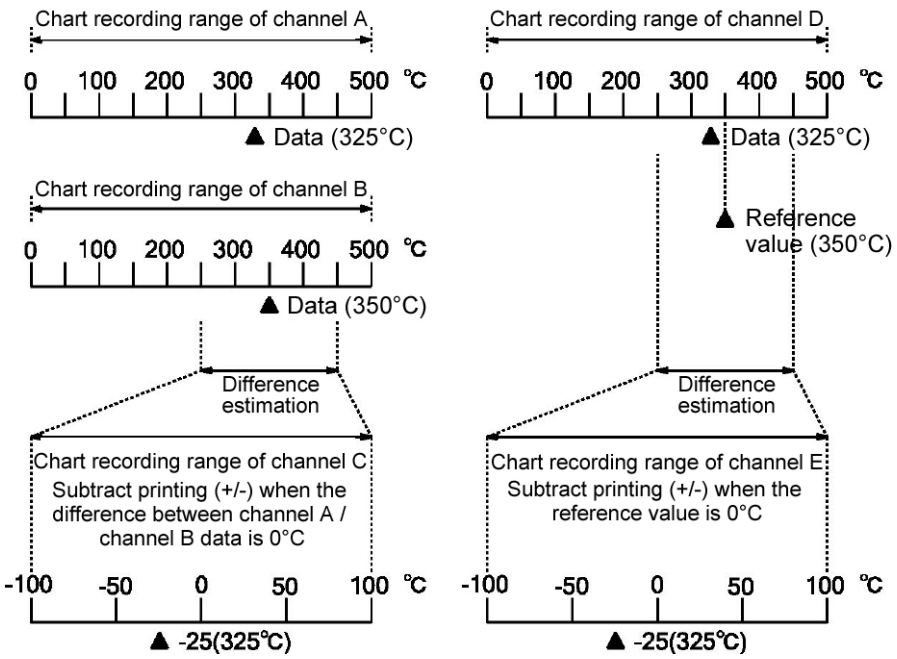

Note 1 **Setting reference value**

Set Const (reference value) within five digits. The decimal point position is linked to the scale setting which is set in input type settings.

Note 2 **Specifying channel for subtract printing**

You can select any channel for subtract printing. For example, CH02 can be specified to handle the result of CH01 - CH02. In this case, the display or record of CH02 (on a chart or SD card) will be “difference”.

Note 3 **For the case DC voltage is selected for INPUT in input type settings**

For a scale-set channel selecting DC voltage input, difference calculation is performed using the scaling value (actual scale value).

2. Parameter settings

(1) Pressing the MENU key displays the menu window (list of setting items).

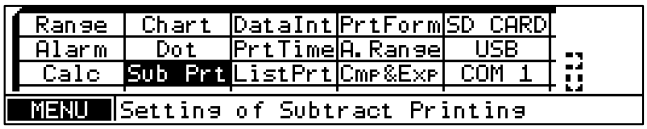

(2) Select “Sub Prt”.

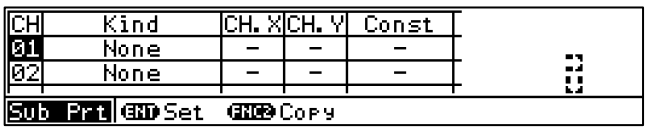

(3) Move the cursor to the target channel with the ▲/▼ keys and press the ENTER key. The cursor does not move to parameters other than CH.
Also, pressing the FUNC2 key on this window displays the copy window for subtract printing settings.

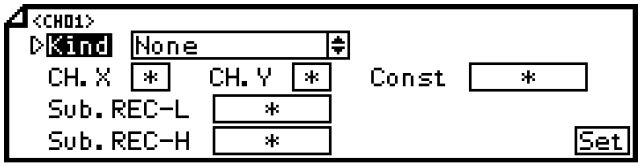

Note: Actual windows are separated. Use the ▲/▼ keys to scroll and continue settings.

(4) Move the cursor to the parameter to be set with the ▲/▼/◀/▶ keys.
(5) Press the ENTER key to make it available for setting and then select or enter a value.
(6) After completing the settings of this item, move the cursor to Set.
(7) Press the ENTER key to register the settings (when chart recording is ON, a setting change mark is printed). To cancel the settings, press the ESC key.

[List of Sub Prt setting parameters]

Parameter	Function	Default	Set value
Kind		None	None, CH.X - CH.Y, CH.X - Const
CH.X	Set measuring CH as minuend	*	1 to 24
CH.Y	Set measuring CH as subtrahend	*	1 to 24
Const	Set reference value subtracted from CH.X	*	-30000 to 99999 Decimal point position is the same as CH.X scale setting
Sub.REC-L	Set lowest end of recording range for subtract printing	*	-30000 to 99999 Decimal point position is the same as CH.X scale setting
Sub.REC-H	Set highest end of recording range for subtract printing	*	-30000 to 99999 Decimal point position is the same as CH.X scale setting

8-10. Dot Printing Interval Settings “Dot.Int”

Set the dot printing interval.

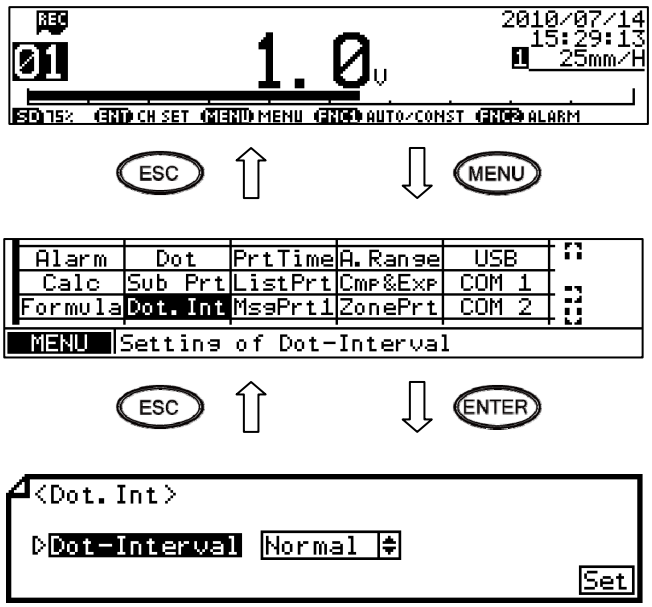

(1) Pressing the MENU key displays the menu window (list of setting items).

(2) Select “Dot.Int”.

(3) Press the ENTER key to make it available for setting and then select a value.
Dot printing interval is approx. 5sec/point with Normal (standard) and approx. 3sec/point with Fast.

(4) After completing the setting of this item, move the cursor to Set.

(5) Press the ENTER key to register the setting (when chart recording is ON, a setting change mark is printed). To cancel the setting, press the ESC key.

[Dot.Int setting parameter]

Parameter	Function	Default	Set value
Dot-Interval	Set dot printing interval	Normal	Normal, Fast, Synchro (linked to chart speed)*

* Note that if "Synchro" is slected, operation recording settings "Ope.Rec" becomes disabled.

Note 1 **Selecting Fast dot printing**

The dot printing interval will be short. If a change in measured value is small, dots may overlap each other and it may damage a chart. To avoid this situation, select Normal (standard) or Synchro (linked to chart speed) for the case measured value produces a small change.
When there are many channels, select Nornal (standard) as the dot printing interval becomes shorter at Synchro (linked to chart speed).

Note 2 **Chart speed interlock mode**

When “Synchro (linked to chart speed)” is selected, the value linked to chart speed is obtained from the following formula. However, when chart speed is 51mm/H or higher, Normal dot printing interval will be used.

$$\text{Dot printing interval [sec]} = 3{,}600\text{sec} \times \frac{0.2\ (\text{mm})}{\text{Chart Speed (mm/H)}}$$

In this case, the dot printing interval is applied to all the target channels whereas Normal (standard) or Fast dot printing interval is applied to each channel update.

8-11. Periodic (Data Interval) Data Printing Settings “DataInt”

In addition to the trace printing on a chart, measured data of each channel can be printed numerically. Measured data can be recorded or printed digitally at desired intervals. Select ON/OFF to enable or disable digital recording/printing for each channel (DIGI.REC) in input type settings described in “8-2. Input Type Settings”.

(1) Pressing the MENU key displays the menu window (list of setting items).

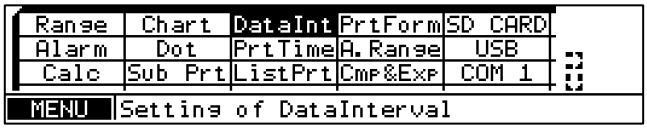

(2) Select “DataInt”.

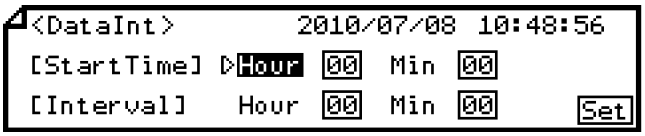

(3) Move the cursor to the parameter to be set with the ▲/▼/◀/▶ keys.
(4) Press the ENTER key to make it available for setting and then enter a value.
(5) After completing the setting of this item, move the cursor to Set.
(6) Press the ENTER key to register the settings (when chart recording is ON, a setting change mark is printed). To cancel

Reference **Calculating the shortest interval**

The shortest interval depends on the chart speed and the number of digital recording/printing channels. If a set interval is inappropriate for the specified chart speed, printing will be executed with a timing of the minimum integral multiple of the interval.

$$\text{Interval [M]} \geq \frac{240 \times \text{printing lines *2}}{\text{Chart speed [mm/H] *1}}$$

Printing lines	2	3	4	5
Interval [M]	4	5	8	10

Shortest interval: The above formula or table, whichever is bigger.

*1: The lowest speed of three speeds is used.

$$\text{*2: } \left(\frac{\text{Number of recording channels (Note)}}{6} + 1 \right) \text{ lines (rounding up to whole number)}$$

Note: This varies by the number of skipped channels.

[List of DataInt setting parameters]

Parameter	Function	Default	Set value
StartTime	Set start time of periodic data printing (When a set time is before the current time, periodic data printing is executed next day.)	00 : 00	00 : 00 to 23 : 59
Interval	Set interval between printings of numeric measured data (every 24 hours 59 minutes and 1 minute at maximum)	00 : 00	00: 00 to 24 : 59

8-12. Periodic (Specified Time) Data Printing Settings “PrtTime”

When the interval described in “8-11. Periodic (Data Interval) Data Printing Settings” is set to “00 : 00”, printing at specified time becomes effective. Time can be specified for up to 24 points and it can be set to ON/OFF individually.

(1) Pressing the MENU key displays the menu window (list of setting items).

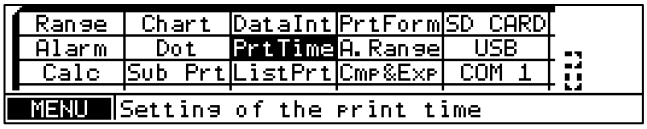

(2) Select “PrtTime”.

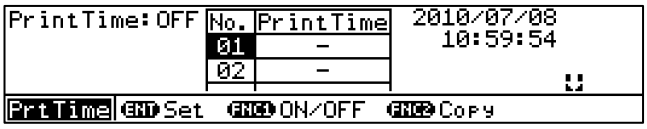

(3) Move the cursor to the target No. with the ▲/▼ keys and press the ENTER key. The cursor does not move to parameters other than No.
Pressing the FUNC1 key on this window turns ON/OFF printing at specified time.
Also, pressing the FUNC2 key displays the copy window for specified time data printing settings.

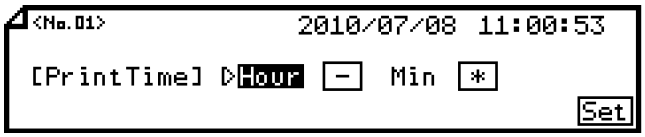

(4) Move the cursor to the parameter to be set with the ▲/▼/◀/▶ keys.
(5) Press the ENTER key to make it available for setting and then enter a value.
(6) After completing the setting of this item, move the cursor to Set.
(7) Press the ENTER key to register the setting (when chart recording is ON, a setting change mark is printed). To cancel the setting, press the ESC key.

[PrtTime setting parameter]

Parameter	Function	Default	Set value
PrintTime	Set at what time measured data is printed numerically	-	- (Not used), 00 : 00 to 23 : 59

Reference **ON/OFF setting for each print time No.**

When [Print Time] is set to “-“, the setting of the relevant No. of specified time will be disabled.

8-13. List Printing Settings “ListPrt”

List printing is used to check the set contents. Contents to be printed depend on the list number.

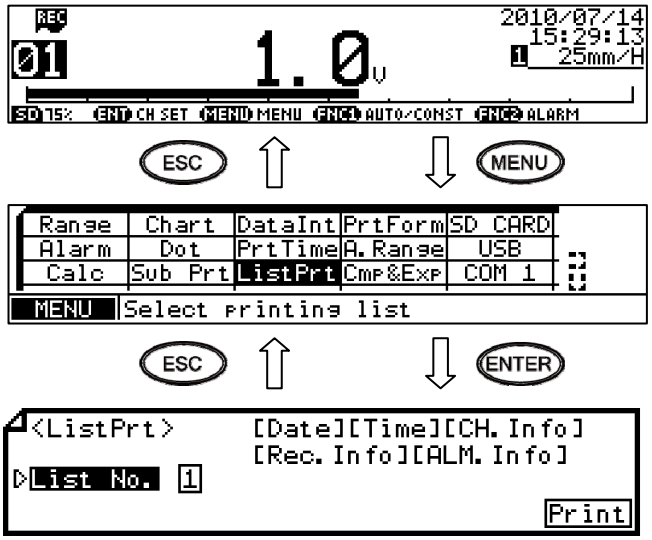

(1) Pressing the MENU key displays the menu window (list of setting items).

(2) Select “ListPrt”.

(3) Press the ENTER key to make it available for setting and then select the list number. Contents to be printed will be shown on the right.

(4) Move the cursor to Print.

(5) Pressing the ENTER key starts list printing. Press the ESC key to cancel.

Note 1 **Inexecutable case**

List printing is available only when recording is ON.

Note 2 **Stopping list printing**

To stop list printing, turn the recording status OFF and then ON again. List printing stops when the currently printing line is finished. When list printing is stopped, it cannot be resumed, so you need to set list printing again to perform it.

Note 3 **Key operation**

You can check but cannot change settings during a list printing process.

[Printed contents by List No.]

List No.	Printed contents
1	Date, Time, CH.Info (channel settings), Rec.Info (recording settings), ALM.Info (alarm settings)
2	Additional Setting, Option Setting Time
3	Date, Time, CH.Info (channel settings), Rec.Info (recording settings), ALM.Info (alarm settings), Additional Setting, Option Setting Time

Example of list printing

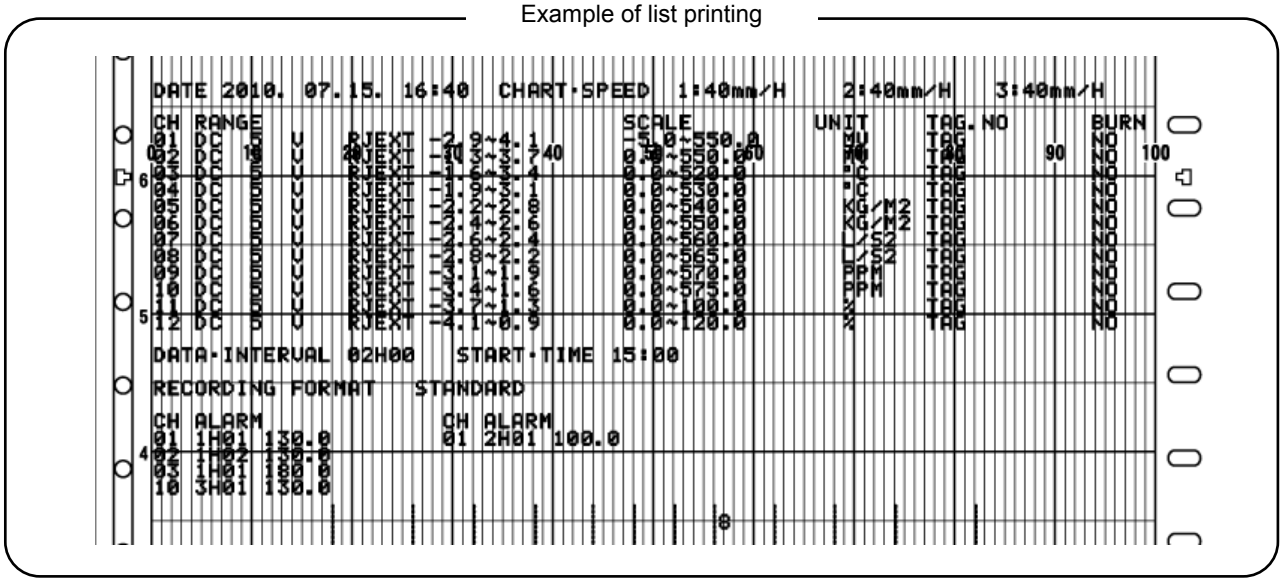

8-14. Message Printing 1 Settings “MsgPrt1”

A message consisting of 15 characters at maximum can be printed and up to 20 types of message can be registered. It is also possible to print a registered message in conjunction with the calendar timer or remote contacts (calendar timer and remote contacts should be set separately).

Example of message printing

(1) Pressing the MENU key displays the menu window (list of setting items).

(2) Select “MsgPrt1”.

(3) Move the cursor to the target message No. with the ▲/▼ keys and press the ENTER key. The cursor does not move to parameters other than No. Also, pressing the FUNC1 key on this window prints the message of selected No. When “*** Start printing? ***” is displayed, press the ENTER key. Pressing the FUNC2 key displays the copy window for message settings.

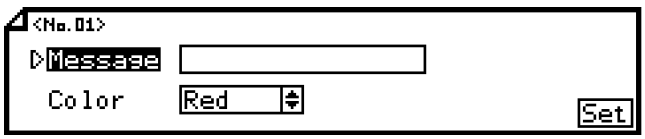

(4) Move the cursor to the parameter to be set with the ▲/▼/◀/▶ keys.

(5) Press the ENTER key to make it available for setting and then select or enter a value.

(6) After completing the settings of this item, move the cursor to Set.

(7) Press the ENTER key to register the settings (when chart recording is ON, a setting change mark is printed). To cancel the settings, press the ESC key.

[List of MsgPrt1 setting parameters]

Parameter	Function	Default	Set value
Message	Set a string consisting of up to 15 characters to be printed	Not set	
Color	Set color used for printing message	Six colors repeated	Red, Black, Blue, Green, Brown, Purple

8-15. Message Printing 2 Settings “MsgPrt2”

A message consisting of up to 72 characters is printed on a chart with arbitrary timing. Message is registered at the time of printing and the last registered message is shown on the setting window.

(1) Pressing the MENU key displays the menu window (list of setting items).

(2) Select “MsgPrt2”.

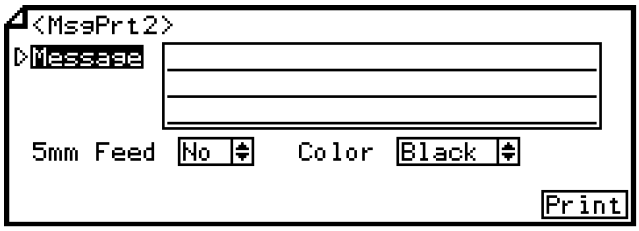

Note: Actual windows are separated. Use the ▲/▼ keys to scroll and continue settings.

(3) Move the cursor to the parameter to be set with the ▲/▼/◀/▶ keys.

(4) Press the ENTER key to make it available for setting and then select or enter a value.

(5) After completing the settings of this item, move the cursor to Print.

(6) Pressing the ENTER key displays the message “*** Start printing? ***”. Press the ENTER key again to start message printing. Press the ESC key to cancel printing.

[List of MsgPrt2 setting parameters]

Parameter	Function	Default	Set value
Message	Set a string consisting of up to 72 characters to be printed	Not set	
5mm Feed	No: Prints message in synchronization with chart speed while executing trace printing Yes: Interrupts trace printing and prints message regardless of chart speed	No	No (no feed), Yes (feed)
Color	Set color used for printing message	Black	Red, Black, Blue, Green, Brown, Purple

8-16. Recording Format Settings “PrtForm”

Set the format for trace printing depending on the intended use.
This function is provided to select the format used for trace printing. Input range and its accuracy are determined by the settings made in “8-2. Input Type Settings”.
The recording format cannot be set for each individual channel. Select one from the following options which is shared by all channels. However, when selecting the automatic range-shift or compressed/expanded printing, whether or not to use the function can be specified for each channel. A channel specified not to use the function will use the standard format.

- Automatic range-shift……Recording range is shifted automatically depending on the input range.
- Compressed/expanded printing ……Chart recording area can be partially shrunk or expanded.
- Zone printing ……Chart recording area can be divided into four areas at maximum.

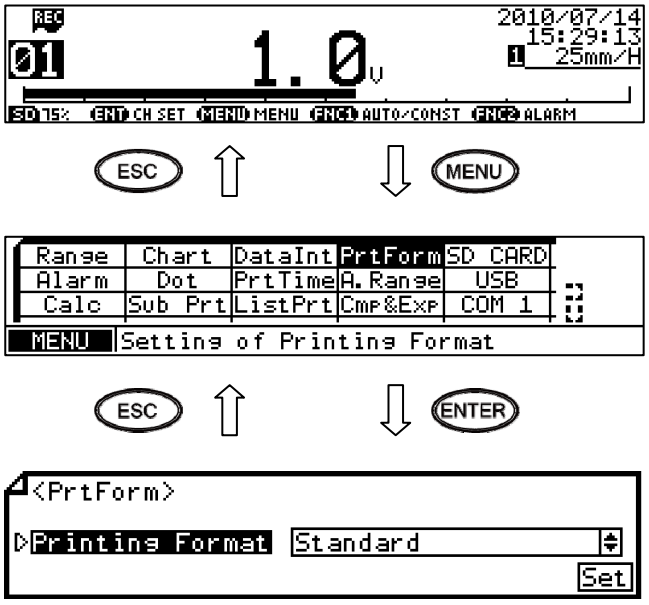

(1) Pressing the MENU key displays the menu window (list of setting items).

(2) Select “PrtForm”.

(3) Press the ENTER key to make it available for setting and then select a value.

(4) After completing the setting of this item, move the cursor to Set.

(5) Press the ENTER key to register the setting (when chart recording is ON, a setting change mark is printed). To cancel the setting, press the ESC key.

[PrtForm setting parameter]

Parameter	Function	Default	Set value
Printing Format	Select recording format	Standard	Standard, Auto Range Normal (automatic range-shift normal), Auto Range Overlap (automatic range-shift overlap), Comp.&Exp.Print (compressed/expanded printing), Zone Print (parallel scale)

8-17. Auto Range Settings “A.Range”

When “Auto Range” is selected for recording format, set the related items. There are two types of automatic range-shift: “Normal” and “Overlap”, the former has separate ranges and the latter has ranges overlapping each other partially around the lower/upper limit. Chart recording range is switched between five ranges at maximum for “Normal” or three ranges at maximum for “Overlap” depending on the measured value. To switch from “Normal” to “Overlap” or vice versa, you need to reset the related items.

- Individual setting available for channels.
- Recording range can be set arbitrarily regardless of the setting of range/chart recording upper and lower limits.
- When a measured value is near a range-shift point, chattering of recording at 0% or 100% position may occur. To prevent this, a range-shift is performed at the point where a measured value exceeds the lower (zero) or higher (span) limit of each range by 0.5mm.
- You can use a copy function for the setting. However, note that the decimal point position depends on the value at destination even if the source value has different decimal point position.
  Example: Source value “120.3”, value at destination “20.05” → value after copy “12.03”

Example of Auto Range settings (Normal)

— For the case of K thermocouple (-200 to 1370°C) —

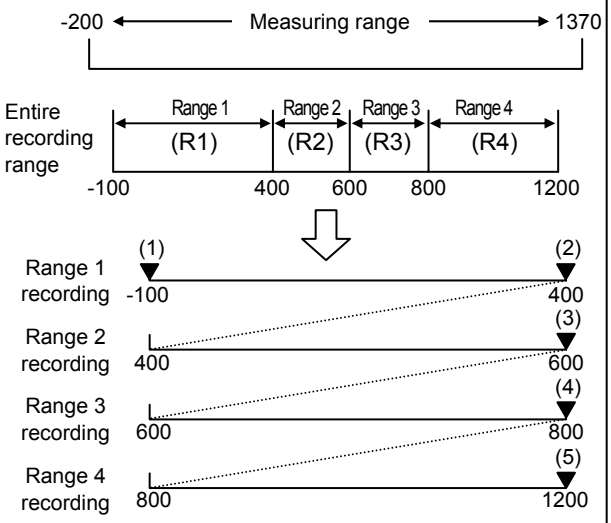

▼ indicates a set point. The order of setting is shown by numbers (1) to (5). In this example, the range 5 is not used. For an unused range, move the cursor to Set with “-“ shown in the setting field and then press the ENTER key to register.

Example of Auto Range settings (Overlap)

— For the case of K thermocouple (-200 to 1370°C) —

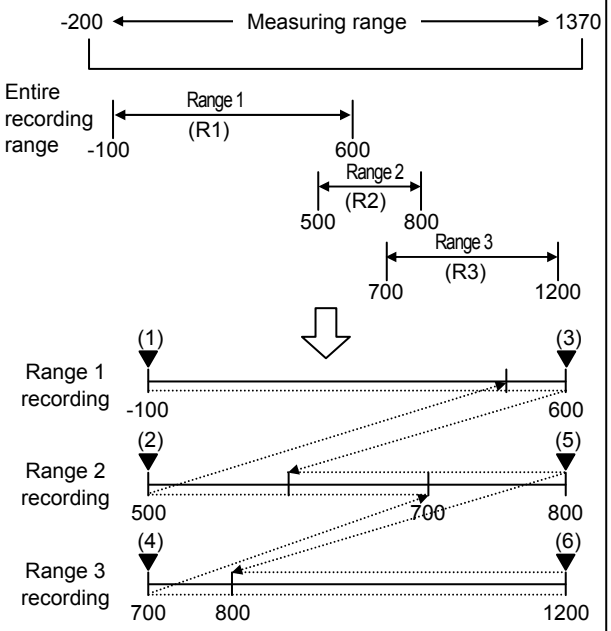

▼ indicates a set point. The order of setting is shown with numbers (1) to (6).

Note **At overlap selection**

When the bar graph display is selected, actual recording position and indication position of the bar graph may vary due to the case of difference between range for recording and range for bar graph display.

* Make sure that the recording format is set to “Auto Range (automatic range-shift)” and then perform the following settings.

(1) Pressing the MENU key displays the menu window (list of setting items).

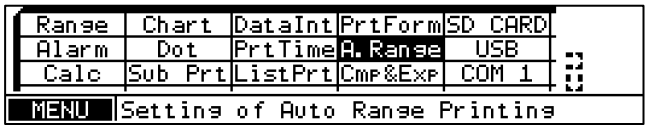

(2) Select “A.Range”.

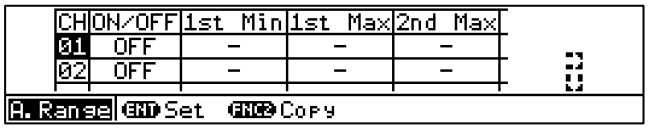

(3) Move the cursor to the target channel with the ▲/▼ keys and press the ENTER key. The cursor does not move to parameters other than CH.
Also, pressing the FUNC2 key on this window displays the copy window for Auto Range settings.

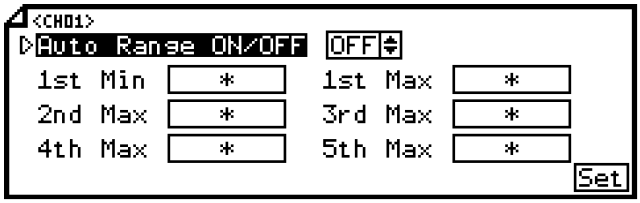

Note: Actual windows are separated. Use the ▲/▼ keys to scroll and continue settings.

(4) Press the ENTER key while the cursor is on “Auto Range ON/OFF” and select ON.
(5) Move the cursor to the parameter to be set with the ▲/▼/◀/▶ keys.
(6) Press the ENTER key to make it available for setting and then select or enter a value. If the set value of 1st Max is equal to or less than 1st Min value, it will not be accepted. The set value should be: 1st Min < 1st Max < 2nd Max < 3rd Max …
(7) After completing the settings of this item, move the cursor to Set.
(8) Press the ENTER key to register the settings (when chart recording is ON, a setting change mark is printed). To cancel the settings, press the ESC key.

[List of A.Range setting parameters] Upper section: Auto Range (Normal), Lower section: Auto Range (Overlap)

Parameter	Function	Default	Set value
Auto Range ON/OFF		OFF	ON (enabled), OFF (disabled)
1st Min 1st Min	Set lowest end of 1st range Set lowest end of 1st range	*	- (None), -30000 to 99999 Decimal point position is the same as CH scale setting
1st Max 2nd Min	Set highest end of 1st range Set lowest end of 2nd range	*	- (None), -30000 to 99999 Decimal point position is the same as CH scale setting
2nd Max 1st Max	Set highest end of 2nd range Set highest end of 1st range	*	- (None), -30000 to 99999 Decimal point position is the same as CH scale setting
3rd Max 3rdMin	Set highest end of 3rd range Set lowest end of 3rd range	*	- (None), -30000 to 99999 Decimal point position is the same as CH scale setting
4th Max 2nd Max	Set highest end of 4th range Set highest end of 2nd range	*	- (None), -30000 to 99999 Decimal point position is the same as CH scale setting
5th Max 3rd Max	Set highest end of 5th range Set highest end of 3rd range	*	- (None), -30000 to 99999 Decimal point position is the same as CH scale setting

8-18. Compressed/Expanded Printing Settings “Cmp&Exp”

When “Comp.&Exp.Print” is selected for recording format, set the related items. A specified area within the chart recording range can be shrunk or expanded.

- Individual setting available for channels.
- Recording range can be set arbitrarily regardless of the setting of range/chart recording upper and lower limits.
- Up to two break points can be set, therefore three shrunk or expanded areas can be obtained at maximum.

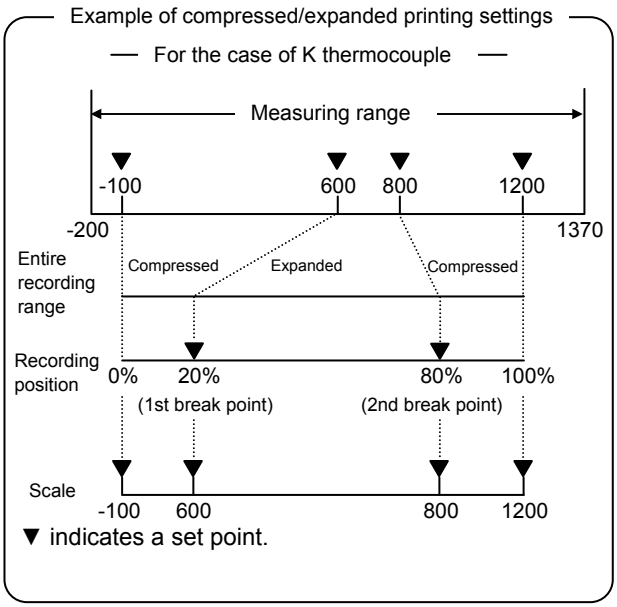

* Make sure that the recording format is set to “Comp.&Exp.Print (compressed/expanded printing)” and then perform the following settings.

(1) Pressing the MENU key displays the menu window (list of setting items).

(2) Select “Cmp&Exp”.

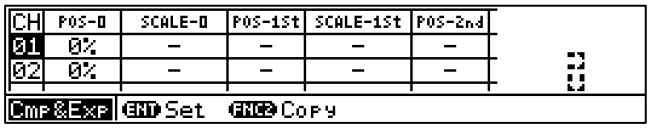

(3) Move the cursor to the target channel with the ▲/▼ keys and press the ENTER key. The cursor does not move to parameters other than CH.
Also, pressing the FUNC2 key on this window displays the copy window for compressed/expanded printing settings.

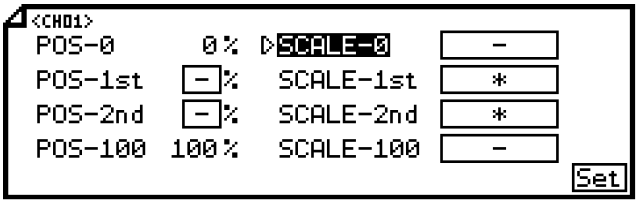

Note: Actual windows are separated. Use the ▲/▼ keys to scroll and continue settings.

(4) Move the cursor to the parameter to be set with the ▲/▼/◀/▶ keys.
(5) Press the ENTER key to make it available for setting and then enter a value.
Set POS (recording position) to 0 to 100% for a 0-180mm chart, satisfying the following condition: POS-1st < POS-2nd.
Also, set SCALE (recording range) to a scale value at the specified position with attention to the decimal point position.
(6) After completing the settings of this item, move the cursor to Set.
(7) Press the ENTER key to register the settings (when chart recording is ON, a setting change mark is printed). To cancel the settings, press the ESC key.

[List of Cmp&Exp setting parameters]

Parameter	Function	Default	Set value
SCALE-0	Set recording scale at 0% recording position	*	- (None), -30000 to 99999 Decimal point position is the same as specified CH scale
POS-1st	Set percentage of recording position of 1st break point to span	-	- (Not used), 1 to 99
SCALE-1st	Set recording scale of 1st break point	*	-30000 to 99999 Decimal point position is the same as specified CH scale
POS-2nd	Set percentage of recording position of 2nd break point to span	-	- (Not used), 1 to 99
SCALE-2nd	Set recording scale of 2nd break point	*	-30000 to 99999 Decimal point position is the same as specified CH scale
SCALE-100	Set recording scale at 100% recording position	*	- (None), -30000 to 99999 Decimal point position is the same as specified CH scale

8-19. Zone Printing Settings “ZonePrt”

When “Zone Print” is selected for recording format, set the number of divisions and recording area. Recording area can be divided into two to four, and you can select an area for recording. This is useful to avoid overlapping of recordings.

- CH or CH range is specified for each recording area.
- The recording range in each area uses the range specified by range/chart recording upper and lower limits.
- See the following table for recording positions [mm] which vary by the number of divisions.

Example of zone printing setting

Two divisions with 6-point input

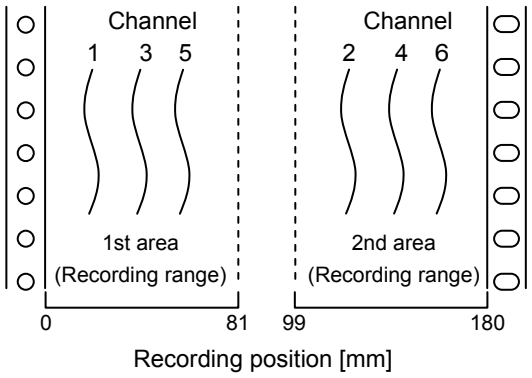

This example specifies 1/3/5 for the 1st area and 2/4/6 for the 2nd area.
(See Reference Area specification.)

Division	1st area	2nd area	3rd area	4th area
2	0 to 81	99 to 180		
3	0 to 54	63 to 117	126 to 180	
4	0 to 36	45 to 81	99 to 135	144 to 180

* Make sure that the recording format is set to “Zone Print (zone printing)” and then perform the following settings.

(1) Pressing the MENU key displays the menu window (list of setting items).

ESC ⇧ ⇩ MENU

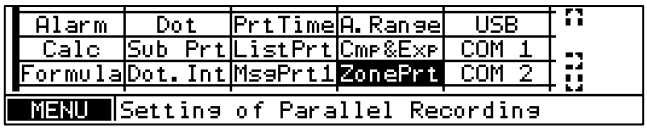

(2) Select “ZonePrt”.

ESC ⇧ ⇩ ENTER

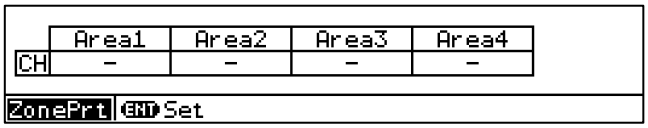

(3) Press the ENTER key.

ESC ⇧ ⇩ ENTER

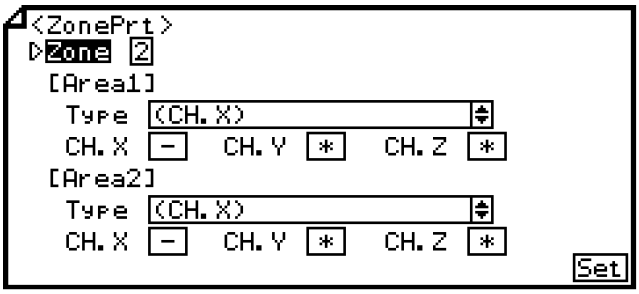

(4) Move the cursor to the parameter to be set with the ▲/▼/◀/▶ keys.

(5) Press the ENTER key to make it available for setting and then select or enter a value.

(6) After completing the settings of this item, move the cursor to Set.

(7) Press the ENTER key to register the settings (when chart recording is ON, a setting change mark is printed). To cancel the settings, press the ESC key.

Note: Actual windows are separated. Use the ▲/▼ keys to scroll and continue settings.
The number of areas increases as you select a greater number for division (Zone), resulting in the need of setting more parameters.

[List of Zoneprt setting parameters]

Parameter	Function	Default	Set value
Zone	Set number of divisions for zone printing	2	2 to 4
Type	Area specification format Selected from options	CH.X	CH.X, CH.X/CH.Y, CH.X - CH.Y, CH.X/CH.Y/CH.Z, CH.X - CH.Y/CH.Z, CH.X/CH.Y - CH.Z
CH.X		-	- (Not used), 1 to 24
CH.Y		*	- (Not used), 1 to 24
CH.Z		*	- (Not used), 1 to 24

Reference **Area specification (Type)**

(CH.X) ····· Record CH.X to the specified area.
(CH.X)/(CH.Y) ····· Record CH.X and CH.Y to the specified area.
(CH.X) - (CH.Y) ····· Record CH.X - CH.Y to the specified area.
(CH.X)/(CH.Y)/(CH.Z) ····· Record CH.X, CH.Y and CH.Z to the specified area.
(CH.X) - (CH.Y)/(CH.Z)····· Record CH.X - CH.Y and CH.Z to the specified area.
(CH.X)/(CH.Y) - (CH.Z)····· Record CH.X and CH.Y - CH.Z to the specified area.

Note **CH selection**

A channel not selected for any area will be skipped.
An error occurs when the same channel is set for multiple areas.

8-20. SD Card “SD CARD”

Measured data can be stored on an SD card at arbitrarily specified time and interval (6-point input: 1sec, 12-point input: 2sec at maximum). Also, measurement/recording conditions including range, scale and chart speed can be stored on an SD card, and the stored data can be used to set up the instrument when needed.
SD card is an accessory part (sold separately). Use one provided by CHINO.
When using except for provided SD card by CHINO (sold separately), data may be damaged and lost.

1. Attaching/removing SD card

Insert an SD card with the label facing down into the insertion slot located at the front section of internal unit. When an SD card is inserted, the “CARD” status LED in the operation/set keys section flashes in green, and an error check is performed automatically. When the card is successfully recognized, the status LED stops flashing and stays on.
To remove an SD card, you must take the steps for proper removal.
(See “8-20.7. Removing SD card”.)
SD card can be removed from the slot by pressing it inward and releasing it with you finger.

2. Operation

There are three types of SD card operation menu: Recording data-Saving (settings related to measured data save), Setting Parameter (saving/loading setting parameters) and SD Card (removal/maintenance).
When a recording to SD card starts, the status on the display turns from “SD” to “R”.

3. Handling

Observe the following warnings and cautions to use SD card safely and prevent loss or damage to your property.

⚠ **Warning**	● Never disassemble or modify SD card. It may result in fire, electric shock or malfunction. ● Do not use SD card in a location where it may get wet or condensation occurs. The internal circuit of SD card may be damaged in such a location. ● Do not handle (attach/remove) SD card near small children to avoid accidental ingestion or other dangerous situations.

⚠ **Caution**	● Do not store SD card in a location exposed to direct sunlight, high temperature, high humidity or too much dust. It may degrade the quality by distortion or warping. ● Do not apply strong impact by dropping, hitting or bending it. It may distort and damage SD card. ● Store SD card with care not to allow dust to enter the connector. ● To protect the internal circuit from static electricity, do not touch the connector (terminal) with your hand or a metal object.

Note **About SD card**

- Do not remove SD card or turn off the power while the “CARD” status LED is lit.
- SD card has been formatted to FAT prior to shipment (SD card is an optional device).
- Execution of format deletes all the stored data. Check the data before starting format.
- While SD card is being accessed, never remove the SD card or turn off the unit connecting the SD card. Otherwise, the data of SD card may be destroyed or the unit itself may be damaged.
- Please note that CHINO holds no responsibilities for losses resulting from damage or data loss of SD card.
- Use SD card with 2GB or less memory and format to FAT16. Use CHINO’s SD card sold separately. When using except for provided SD card by CHINO (sold separately), data may be damaged and lost.

4. Settings related to measured data save

Set the format for recording measured data on SD card, trigger to start/stop recording and measuring interval.

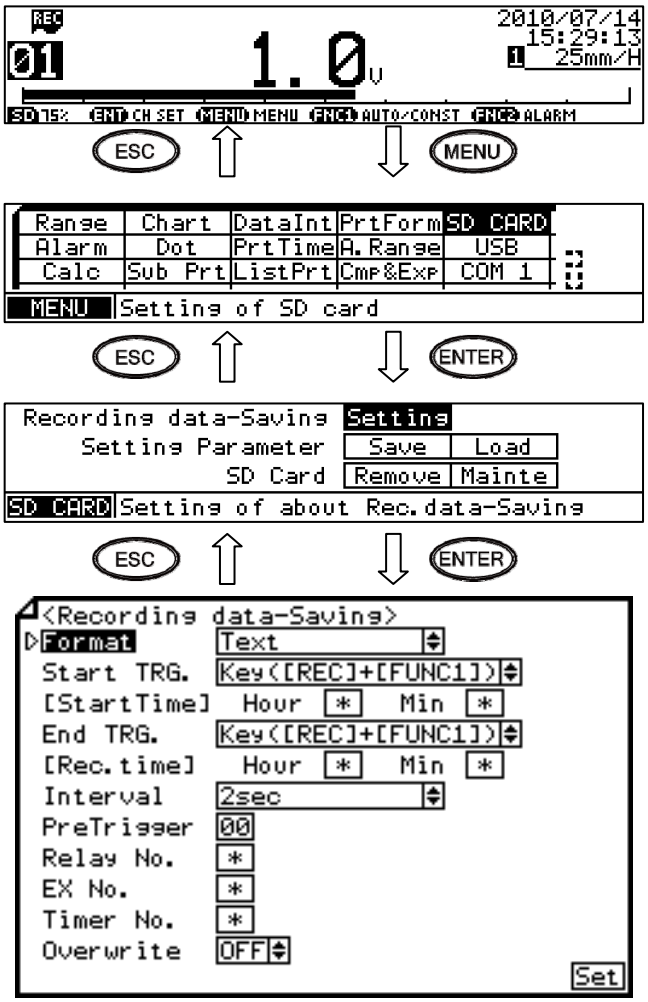

Note: Actual windows are separated. Use the ▲/▼ keys to scroll and continue settings.

(1) Pressing the MENU key displays the menu window (list of setting items).

(2) Select “SD CARD”.

(3) Make sure that the cursor is on Setting beside “Recording data-Saving” and then press the ENTER key.

(4) Move the cursor to the parameter to be set with the ▲/▼/◀/▶ keys.

(5) Press the ENTER key to make it available for setting and then select or enter a value.

(6) After completing the settings of this item, move the cursor to Set.

(7) Press the ENTER key to register the settings (when chart recording is ON, a setting change mark is printed). To cancel the settings, press the ESC key.

Note 1 **Relation between start time and start trigger**

If a specified start time is before the current time, recording will start from the next day.

Note 2 **Loading parameter during recording**

When you load setting parameters while measured data is being recorded, the recording process will be stopped.

Note 3 **Key operation for handling start trigger**

To operate the start trigger with keys, set the start trigger to other than “None”. Even when the start trigger is set to other than “Key”, a start by key operation is given higher priority than other methods.
The same can be applied to the end trigger. Both start and end triggers can be executed on any window.
The confirmation message: “*** Start recording to SD-Card? ***” or “*** Quit recording to SD-Card? ***” will be displayed by pressing the REC key → FUNC1 key. Press the ENTER key to execute or the ESC key to cancel.

[List of Recording data-Saving setting parameters]

Parameter	Function	Default	Set value
Format	Select format for recording to SD card	Text	Binary: Uses “A4F” extension. Analysis software is required for data replay. Text: Uses “TXT” extension. Data can be replayed with Microsoft Excel as needed. Binary (float): Binary (floating decimal point) Text (float): Text (floating decimal point)
Start TRG.	Select trigger for recording start	Key	None (None), Key (started by REC + FUNC1 key), StartTime (specified time), Alarm (linked to alarm output), EX (linked to remote contact), Chart (linked to chart recording), Chart End (linked to chart end), Timer (linked to calendar timer)
[StartTime]	Set recording start time when selecting “StartTime” for Start TRG	*	00 : 00 to 23 : 59
End TRG.	Select trigger for recording stop	Key	Key (stopped by REC + FUNC1 key), Rec.time (specified time), Alarm (linked to alarm output), EX (linked to remote contact), Chart (linked to chart recording), Chart End (linked to chart end), Timer (linked to calendar timer)
[Rec.time]	Set recording time when selecting “Rec.time” for End TRG	*	00 : 00 to 99: 59
Interval	Select interval of recording to SD card	1sec ／ 2sec By speification	1sec, 2sec, 3sec, 4sec, 5sec, 6sec, 10sec, 15sec, 16sec, 20sec, 30sec, 1min, 2min, 3min, 5min, 10min, 15min, 20min, 30min, 60min, Dot-Interval Options of recording interval vary by the number of inputs
PreTrigger	Past data for the specified number of samples is recorded to SD card when recording is started	00	0 to 10 Note: Past data is initialized when settings are changed or card is inserted/removed. When PreTrigger is set, the recording interval synchronizes with past data, so there may be a case that measured data at recording start time is not recorded.
Relay No.	Set alarm output No. used when “Alarm” is selected for Start TRG or End TRG	*	- (No output), 99 (internal circuit output), 1 to 24
EX No.	Set remote contact No. used when “EX” is selected for Start TRG or End TRG	*	0 to 20
Timer No.	Set remote contact No. used when “Timer” is selected for Start TRG or End TRG	*	0 to 5
Overwrite	Select overwrite mode	OFF	ON, OFF

[Restrictions on start/end trigger selection]

		End trigger						
		Key	Specified time	Alarm output linked	Remote contact linked	Chart recording linked	Chart end linked	Calendar timer linked
Start trigger	None	x	x	x	x	x	x	x
	Key	O	O	x	x	x	x	x
	Specified time	O	O	x	x	x	x	x
	Alarm output linked	O	O	O	x	x	x	x
	Remote contact linked	O	O	x	O	x	x	x
	Chart recording linked	x	O	x	x	O	x	x
	Chart end linked	O	O	x	x	x	O	x
	Calendar timer linked	O	O	x	x	x	x	O

Note 4 **Overwrite mode of measured data**

When overwrite mode is ON and the free space on SD card decreases to 1 % or lower, the oldest measured data is deleted.
When overwrite mode is OFF and the free space on SD card decreases to 1% or lower, the data may not be saved.

Note 5 **File division**

Measured data file is divided by a certain number of bytes.
(The number of bytes varies by the number of recording channels, etc.)
Also, the file is divided if device setting or date and time setting is changed.

Reference **File save location**

A measured data file is saved in a folder created each month/year within the “HR_DATA” folder (for example, a folder is named “HR201101” for Jan. 2011).
Also, a setting parameter file is saved in the “HR_SET” folder.

Note 6 **Recording format which can perform playback**

When using SD card playback of option, recording format need to set Binary or Binary (float).
Playback is not performed by text format.

Note 7 **Recording mode**

Measured data saving and SD card playback have two mode (matching mode and normal mode).
Measured data at the time of dot print is recorded to SD card in matching mode. Data which is synchronized with dot print can be recorded to SD card.
In normal mode, dot print data and data of SD card recording is not synchronized.
When reproduced by matching mode during playback, normal recording is reproduced. When reproduced by normal mode, normal recording is not corresponding because of reproduced by using time data which is different from normal recording.
(Refer to 13-7. SD Card Playback for details of SD card playback function.)

When recorded to SD card by matching mode, set Dot-Interval of dot printing interval.
If selecting dot printing interval except for Dot-Interval, recorded by normal mode.

When recorded by Dot-Interval mode, there are following restrictions.

- Using 5sec/point (Normal) or 3sec/point (Fast) in dot printing interval.
  Do not use Synchro (linked to chart speed).
  Dot printing interval: When SD card recording interval is set Dot-Interval at the time of Synchro setting, dot printing interval is switched to Normal.
- Recording interval to SD card is fixed to 5 seconds at Normal and 3 seconds at Fast.
- Start trigger and end trigger of SD card recording is fixed to [Chart (linked to chart recording)].
- Pre trigger function cannot be used.

5. Saving setting parameters

The setting data of the unit can be saved to an SD card.

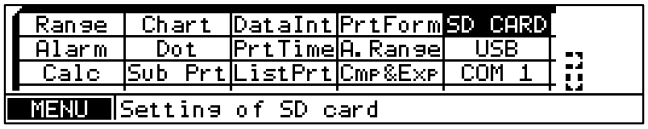

(1) Select “SD CARD” from the menu window (list of setting items).

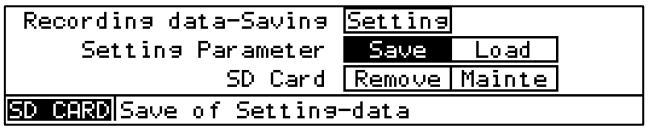

(2) Move the cursor to Save beside “Setting Parameter” and press the ENTER key.

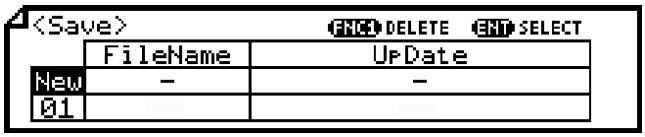

(3) Select New to add a file. To overwrite a file, select the file No. to be overwritten. Also, pressing the FUNC1 key on this window can remove the data of specified file No. from SD card. When “*** Delete? ***” is displayed, press the FUNC1 key again to remove the data.

(4) Press the ENTER key to make it available for setting and then enter a file name. Enter single-byte, upper-case alphanumeric characters up to eight digits.

(5) After completing the settings of this item, move the cursor to Set.

(6) Press the ENTER key. When “*** Start Saving? ***” is displayed, press the FUNC1 key to start saving setting parameters to SD card. To cancel saving, press the ESC key.

Note 1 **Setting file name**

You cannot specify the same name for files even if they have different numbers.

Note 2 **Number of files saved**

The maximum number of setting parameter files which can be saved to a single SD card is 10.

Reference 1 **File display order**

On the setting file list window, files are displayed in the chronological order with the most recent updated file listed first.

Reference 2 **Update date display**

When a file name is registered on the setting parameter registration window, the update date will be reflected automatically.

6. Loading setting parameters

The setting data saved to an SD card can be loaded and set into the unit.

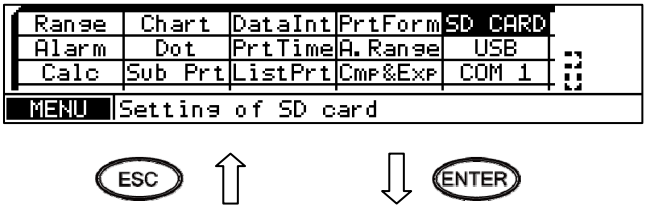

(1) Select “SD CARD” from the menu window (list of setting items).

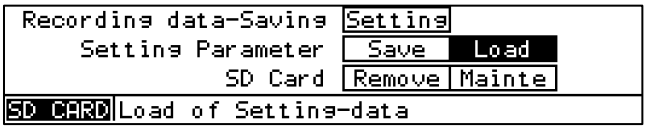

(2) Move the cursor to Load of “Setting Parameter” and press the ENTER key.

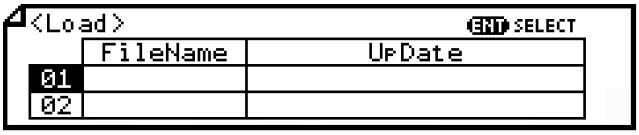

(3) Move the cursor to the file No. to be loaded with the ▲/▼ keys and then press the ENTER key.

(4) Press the ENTER key. When “*** Start Loading? ***” is displayed, press the FUNC1 key to start loading setting data. To cancel loading, press the ESC key.

Note 1 **Save current settings**

When you load setting parameters, all the current parameters will be overwritten.
Save the current parameters to SD card before loading saved parameters.

Note 2 **Loading cannot stop**

It is not possible to stop loading saved parameters in the middle of the process.

7. Removing SD card

Make sure to take the following procedure to remove SD card.

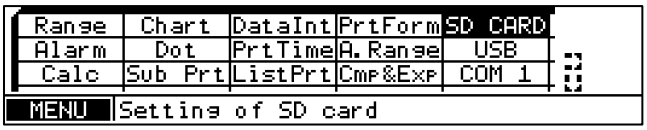

(1) Select “SD CARD” from the menu window (list of setting items).

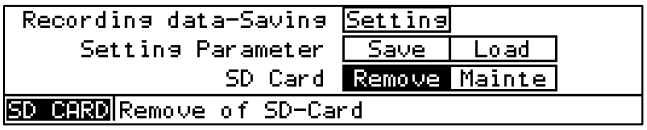

(2) Move the cursor to Remove beside “SD Card” and press the ENTER key.

(3) When “*** Stop the SD-Card? ***” is displayed, press the FUNC1 key. Press the ESC key to cancel.

(4) Make sure that the green “CARD” status LED in the operation/set keys section turns off, and then remove SD card.

Note **Removing SD card during recording**

You cannot remove SD card while recording to it. Error occurs when it is attempted.

8. SD card maintenance

Format SD card or delete old setting files according to the following procedure.

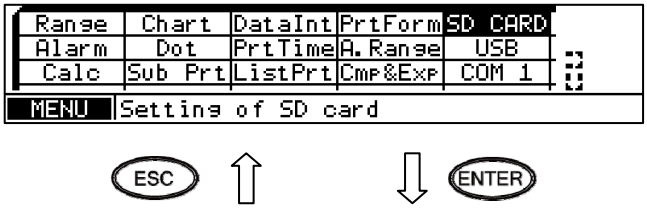

(1) Select “SD CARD” from the menu window (list of setting items).

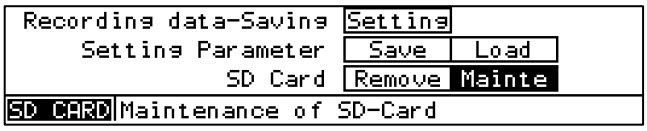

(2) Move the cursor to Mainte of “SD Card” and press the ENTER key.

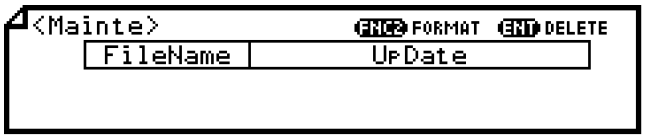

(3) Perform desired maintenance.
Press the FUNC2 key to format SD card. When “*** Format the SD-Card? ***” is displayed, press the FUNC1 key to start formatting.
Selecting a file No. and pressing the ENTER key can remove the selected file from SD card. When “*** Delete? ***” is displayed, press the FUNC1 key to delete the file.

Reference **File display order**

On the setting file list window, files are displayed in the chronological order with a file having the oldest update date listed first.

Note 1 **Periodic maintenance**

To use SD card at its maximum performance, format it periodically.

Note 2 **Format**

- Note that all the data saved on an SD card is deleted by formatting.
- You cannot format an SD card while recording.

8-21. USB Engineering Port Settings “USB”

Using the provided programming software, parameters can be set or changed on a personal computer. This port is connected to PC temporarily to set or change parameters and is not intended for long time connection.
Refer to the instruction manual of provided programming software for details.

Type	Contents
USB connection mode [Mode]	Fixed to BULK Dedicated protocol is used.
USB identification [USB ID]	This is used to identify each unit when connecting multiple units (up to five units) to a PC.

* Set USB ID to “1” when using the provided programming software.
Only one unit can be connected to a PC.

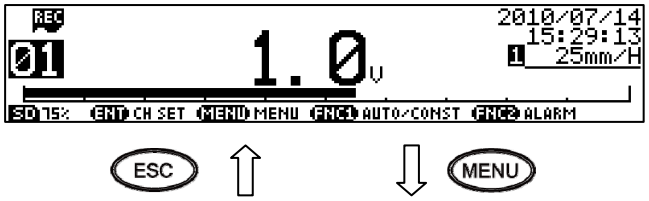

(1) Pressing the MENU key displays the menu window (list of setting items).

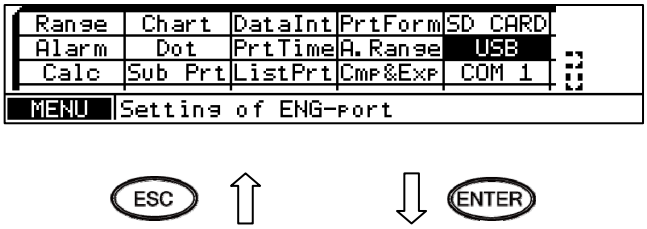

(2) Select “USB”.

(3) Press the ENTER key to make it available for setting and then enter a value.
(4) After completing the settings of this item, move the cursor to Set.
(5) Press the ENTER key to register the settings (when chart recording is ON, a setting change mark is printed). To cancel the settings, press the ESC key.

[List of USB setting parameters]

Parameter	Function	Default	Set value
Mode	Connection mode	BULK	Fixed to BULK
USB ID	USB identification	1	1 to 5

8-22. Calendar Timer Settings “Timer”

Alarm relay output ON/OFF or message printing can be executed on a date specified arbitrarily. Up to five dates can be set, and alarm relay output ON/OFF or message No. can be specified for each date.
Actual printing is executed in the following order: “Date”, “Time”, “Timer No.” and then “Message”.

(1) Pressing the MENU key displays the menu window (list of setting items).

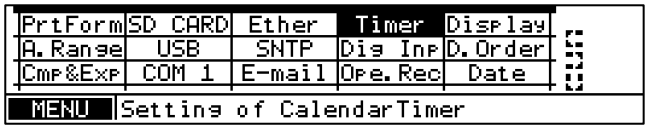

(2) Select “Timer”.

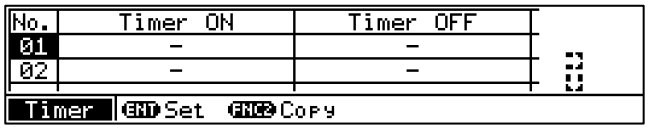

(3) Move the cursor to the target calendar timer No. with the ▲/▼ keys and press the ENTER key. The cursor does not move to parameters other than No.
Also, pressing the FUNC2 key on this window displays the copy window for calendar timer settings.

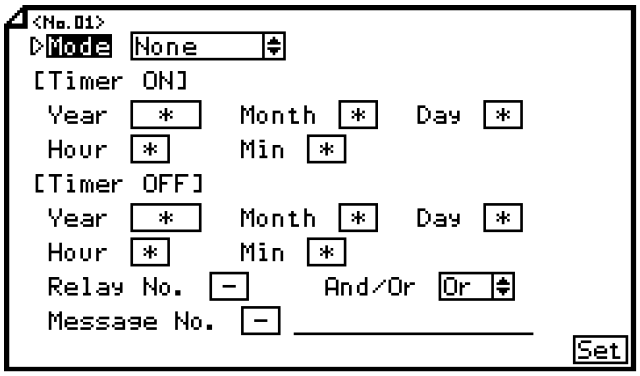

(4) Move the cursor to the parameter to be set with the ▲/▼/◀/▶ keys.
(5) Press the ENTER key to make it available for setting and then select or enter a value.
(6) After completing the settings of this item, move the cursor to Set.
(7) Press the ENTER key to register the settings (when chart recording is ON, a setting change mark is printed). To cancel the settings, press the ESC key.

Note: Actual windows are separated. Use the ▲/▼ keys to scroll and continue settings.

[List of Timer setting parameters]

Parameter	Function	Default	Set value
Mode	Select timer type	None	None, ON (specify ON time only) ON & OFF (specify both ON and OFF times)
[Timer ON]	Set date and time for alarm output ON or message printing	*	Jan 1, 2000 to Dec 31, 2099 00 : 00 to 23 : 59
[Timer OFF]	Set date and time for alarm output OFF	*	Jan 1, 2000 to Dec 31, 2099 00 : 00 to 23 : 59
Relay No.	Specify relay No. for timer ON output	*	- (No output at timer ON), 99 (internal circuit output), 1 to 24
And/Or	Select circuit type for timer ON output	*	And, Or
Message No.	Specify message No. printed at timer ON	*	- (Message not printed at timer ON), 1 to 20

8-23. Fail Output Settings “FailOut”

Set the alarm operation performed at an activation of system related alarm (chart end, disconnection of input, SD card error or low capacity, low backup battery level or other system error).
The SD card low-capacity alarm is activated when the free space on SD card decreases to 3% or lower.
The backup battery low-level alarm is activated when the voltage of backup battery for clock drops to 2.0V or lower.
The status information of other errors can be viewed by selecting “SysInfo” from the menu window.
Each alarm is turned off when the alarm condition is cleared or alarm operation is disabled in this setting (individual setting available).

(1) Pressing the MENU key displays the menu window (list of setting items).

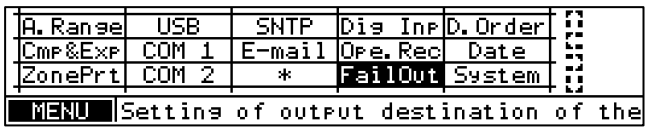

(2) Select “FailOut”.

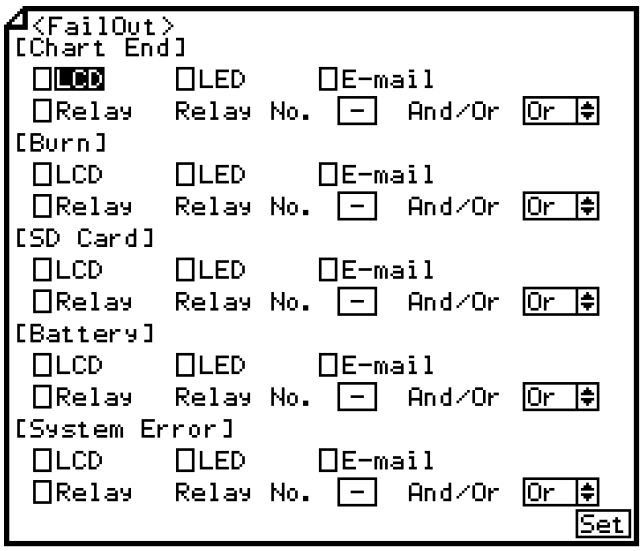

(3) Move the cursor to the parameter to be set with the ▲/▼/◀/▶ keys.
(4) Press the ENTER key and check ☑ the check box of required items.
Also, set the desired relay No. for output and circuit type.
(5) After completing the settings of this item, move the cursor to Set.
(6) Press the ENTER key to register the settings (when chart recording is ON, a setting change mark is printed). To cancel the settings, press the ESC key.

Note: Actual windows are separated. Use the ▲/▼ keys to scroll and continue settings.

[List of FailOut setting parameters]

Parameter	Function	Default	Set value
Chart End	Set alarm operation at detection of chart end	Not selected	LCD (LCD display), LED (LED indication), E-mail, Relay (relay output) Check a check box of desired item.
Chart End Relay No.	Set alarm output relay No. at detection of chart end	-	- (No output), 99 (internal circuit output), 1 to 24
Chart End And/Or	Select circuit type of alarm output at detection of chart end	Or	And, Or
Burn	Set alarm operation at detection of input disconnection	Not selected	LCD (LCD display), LED (LED indication), E-mail, Relay (relay output) Check a check box of desired item.
Burn Relay No.	Set alarm output relay No. at detection of input disconnection	-	- (No output), 99 (internal circuit output), 1 to 24
Burn And/Or	Select circuit type of alarm output at detection of input disconnection	Or	And, Or
SD Card	Set alarm operation at detection of SD card low capacity	Not selected	LCD (LCD display), LED (LED indication), E-mail, Relay (relay output) Check a check box of desired item.
SD Card Relay No.	Set alarm output relay No. at detection of SD card low capacity	-	- (No output), 99 (internal circuit output), 1 to 24
SD Card And/Or	Select circuit type of alarm output at detection of SD card low capacity	Or	And, Or
Battery	Set alarm operation at detection of backup battery low level	Not selected	LCD (LCD display), LED (LED indication), E-mail, Relay (relay output) Check a check box of desired item.
Battery Relay No.	Set alarm output relay No. at detection of backup battery low level	-	- (No output), 99 (internal circuit output), 1 to 24
Battery And/Or	Select circuit type of alarm output at detection of backup battery low level	Or	And, Or
System Error	Set alarm operation at detection of system error	Not selected	LCD (LCD display), LED (LED indication), E-mail, Relay (relay output) Check a check box of desired item.
System Error Relay No.	Set alarm output relay No. at detection of system error	-	- (No output), 99 (internal circuit output), 1 to 24
System Error And/Or	Select circuit type of alarm output at detection of system error	Or	And, Or

8-24. Display Settings “Display”

The display mode, channel update interval, brightness and chart illumination can be set. When the display backlight and chart illumination are set to “AUTO” in ON/OFF/AUTO setting, the LCD backlight and chart illumination will be turned off when an unused period reaches three minutes. They will be turned on when any key is pressed.

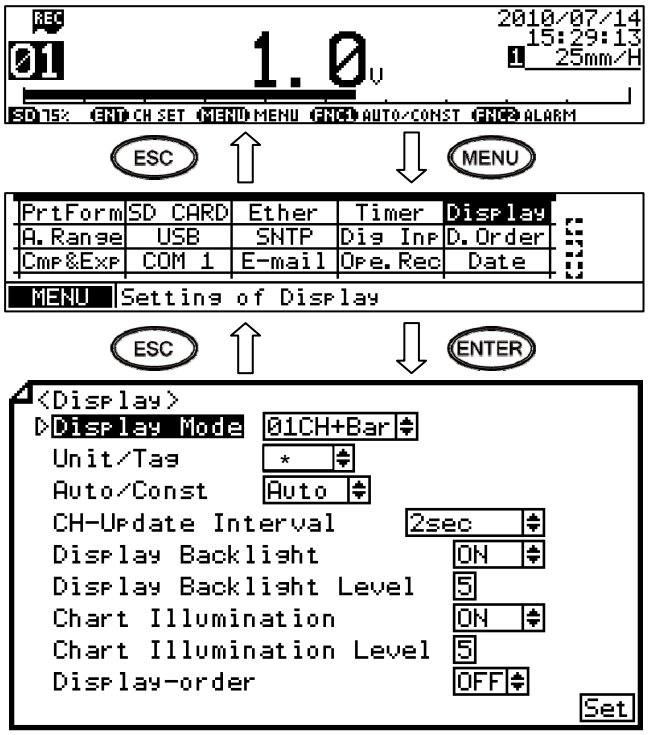

Note: Actual windows are separated. Use the ▲/▼ keys to scroll and continue settings.

(1) Pressing the MENU key displays the menu window (list of setting items).

(2) Select “Display”.

(3) Move the cursor to the parameter to be set with the ▲/▼/◀/▶ keys.

(4) Press the ENTER key to make it available for setting and then select or enter a value.

(5) After completing the settings of this item, move the cursor to Set.

(6) Press the ENTER key to register the settings (when chart recording is ON, a setting change mark is printed). To cancel the settings, press the ESC key.

Note **Do not look at light directly**

Do not look at the chart illumination directly for the risk of serious eye damage.

[List of Display setting parameters]

Parameter	Function	Default	Set value
Display Mode	Select number of channels and information displayed on a single window	01CH+Bar	01CH, 01CH+Bar, 06CH, 06CH+TAG, 12CH, 24CH Selectable display modes depend on the number of inputs
Unit/Tag	Select unit or tag to be displayed	Unit	Unit, Tag Available only for 12CH simultaneous display mode When using 6CH and below, it display *and cannot set up.
Auto/Const	Select either manual (key) or auto (update interval) for display CH update	Auto	Auto, Const
CH-Update Interval	Set update interval of display CH	2sec	Synchro (linked to dot printing), 1sec, 2sec, 3sec, 5sec, 10sec, 30sec This is disabled when the dot printing interval is set to “Synchro”.
Display Backlight	Select ON or AUTO for LCD backlight With AUTO selected, LCD backlight is turned off after three minutes of unused period.	ON	ON (always ON), AUTO
Display Backlight Level	Select brightness of backlight	5	1 (dark) to 5 (light)
Chart Illumination	Select ON, OFF or AUTO for chart illumination With AUTO selected, chart illumination is turned off after three minutes of unused period.	ON	ON (always ON), AUTO, OFF
Chart Illumination Level	Select brightness of chart illumination	5	0 (OFF) to 5 (light)
Display-order	Select whether to display measured value in chronological order of CH No. or arbitrary order.	OFF	ON (arbitrary order), OFF (chronological order of CH No.)

8-25. Measured Value Display Order Settings “D.Order”

The order of CH update can be changed for measured value display. When the simultaneous display mode with six or more input points is selected, measured value will be displayed in the specified CH No. order. For models using 12 or more input points, this can be used to divide the display into groups.

(1) Pressing the MENU key displays the menu window (list of setting items).

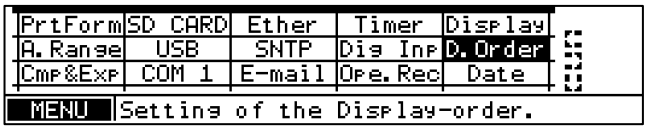

(2) Select “D.Order”.

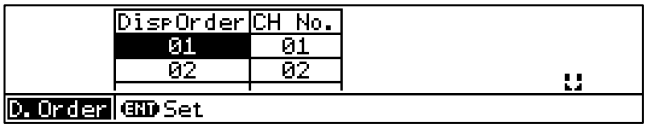

(3) Set CH No. to create a desired order of update (display) from 01 to24.

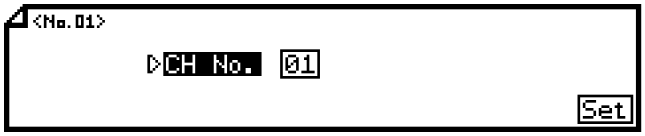

(4) Press the ENTER key to make it available for setting and then enter CH No.
(5) After completing the setting of this item, move the cursor to Set.
(6) Press the ENTER key to register the setting (when chart recording is ON, a setting change mark is printed). To cancel the setting, press the ESC key.

[D.Order setting parameter]

Parameter	Function	Default	Set value
CH No.	Set CH No. to be updated (displayed)	1 to 24	- (Skipped with 1-CH display, blank display with multiple channel display), 1 to 24

8-26. Date and Time Settings “Date”

The unit is equipped with a clock which indicates “year/month/day/hour/minute/second”. The time has been set prior to shipment. Reset it when needed.

(1) Pressing the MENU key displays the menu window (list of setting items).

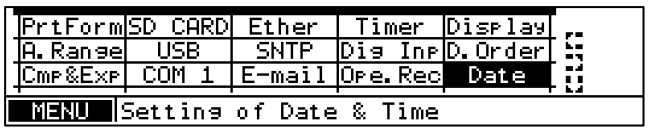

(2) Select “Date”.

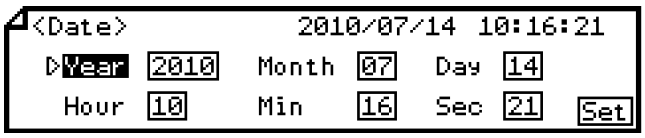

(3) Move the cursor to the parameter to be set with the ▲/▼/◀/▶ keys.
(4) Press the ENTER key to make it available for setting and then enter a value.
(5) After completing the settings of this item, move the cursor to Set.
(6) Press the ENTER key to register the settings (when chart recording is ON, a setting change mark is printed). To cancel the settings, press the ESC key.

[List of Date setting parameters]

Parameter	Default	Set value
Year	Current time has been set.	2000 to 2099
Month		Jan 1 to Dec 31
Day		
Hour		00:00:00 to 23:59:59
Min		
Sec		

8-27. System Settings “System”

The system related settings such as enabling/disabling settings are available. You can disable a setting change by keys (Key Lock), clear memory (Initialize), disable/enable zero or span adjustment for dot printing position (Adjust of Rec position) or disable/enable input adjustment (Input Correction) by entering a password. Set these items as a recovery process when the unit does not function properly due to misoperation or other reasons.

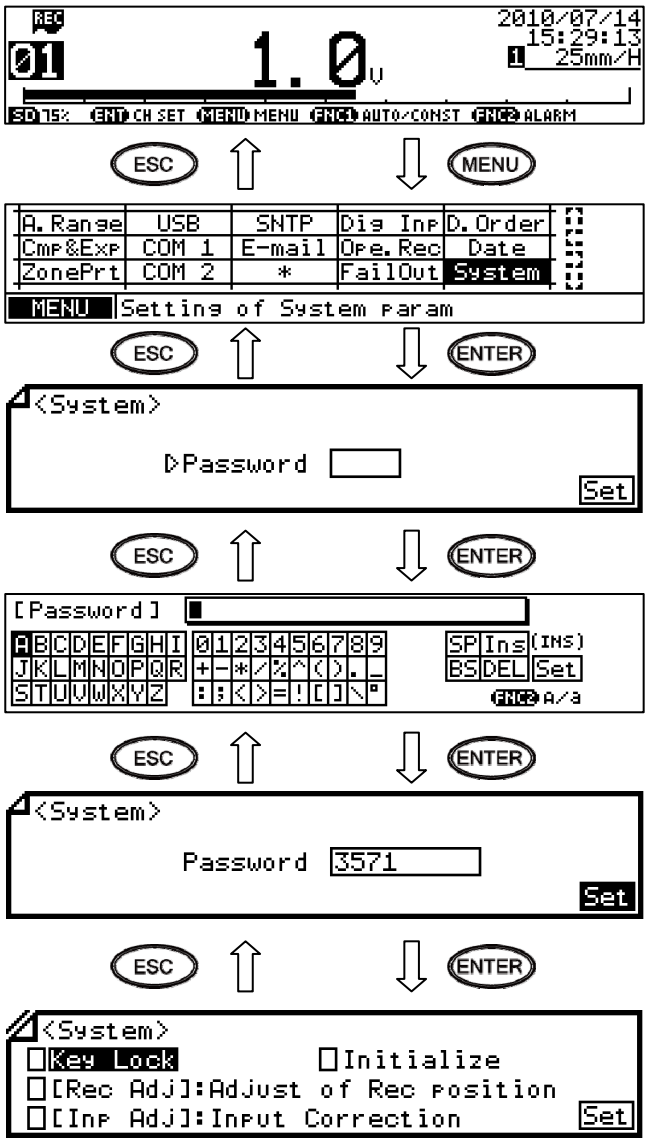

(1) Pressing the MENU key displays the menu window (list of setting items).

(2) Select “System”.

(3) Pressing the ENTER key opens the password entry window.

(4) Enter a password. After that, move the cursor to Set and press the ENTER key.

(5) When password entry is completed, move the cursor to Set and press the ENTER key.

(6) When the setting window is displayed, move the cursor to the parameter to be set with the ▲/▼/◀/▶ keys.

(7) Press the ENTER key and check ☑ the desired item.

(8) After completing the settings of this item, move the cursor to Set.

(9) Press the ENTER key to register the settings (when chart recording is ON, a setting change mark is printed). To cancel the settings, press the ESC key.

Note 1 **Default password**

The default password is “3571”. This password cannot be changed.

Note 2 **Memory clear**

When the memory clear (Initialize) is executed, parameters will be reset to default values.
This cannot initialize the adjustment data (analog zero/span calibration) and soft dip information.

Note 3 **Key operation**

When Key Lock is enabled, settings of all items cannot be changed.
The message “Key locking .....” is displayed when you try to register a parameter.
However, checking of setting items is available.

8-28. System Information Display “SysInfo”

The system information display shows the model, serial number, software version of CPU used (for preamplifier, printer and other application), MAC address (Ethernet specification only) and status of system.

(1) Pressing the MENU key displays the menu window (list of setting items).

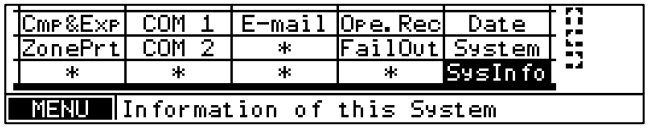

(2) Select “SysInfo”.

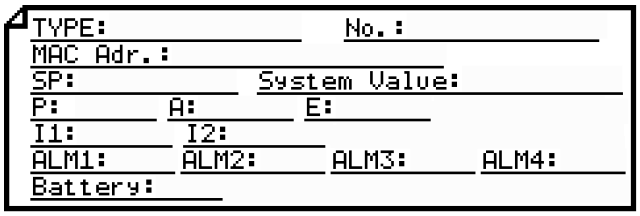

(3) Pressing the ENTER key displays the system information.

Item	Contents
TYPE	Model code of the unit (“-” excluded)
No.	Serial number of the unit
MAC Adr.	MAC address of the unit using Ethernet option * This field is left blank when Ethernet option is not used.
SP	Additional information (0X00000000 displayed normally)
System Value	Value depends on the unit specification
P	Printer software version
A, E	Application software version
I1	Preamplifier 1 software version
I2	Preamplifier 2 software version
ALM1 to ALM4	Alarm unit software version
Battery	Clock backup voltage

8-29. Soft Dip Switch Settings “SoftDip”

ON/OFF of each printing setting and function are switched. Turn off the power after the setting in order to reflect the setting. This is not initialized. It is different from contents of soft dip switch setting on setting software.

(1) Pressing the MENU key displays the menu window (list of setting items).

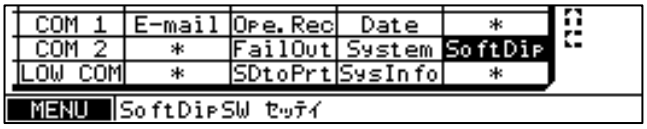

(2) Select “SoftDip”.

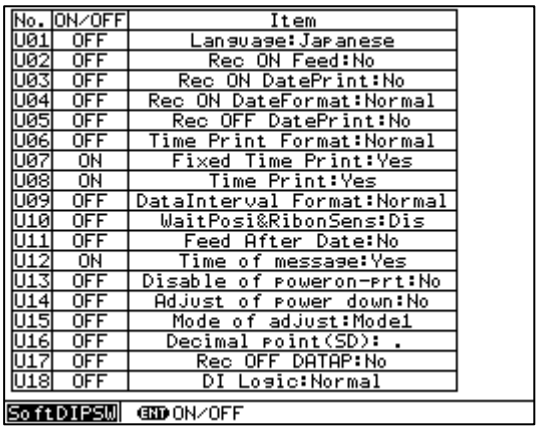

No.	ON/OFF	Item
U01	OFF	Language:Japanese
U02	OFF	Rec ON Feed:No
U03	OFF	Rec ON DatePrint:No
U04	OFF	Rec ON DateFormat:Normal
U05	OFF	Rec OFF DatePrint:No
U06	OFF	Time Print Format:Normal
U07	ON	Fixed Time Print:Yes
U08	ON	Time Print:Yes
U09	OFF	DataInterval Format:Normal
U10	OFF	WaitPosi&RibonSens:Dis
U11	OFF	Feed After Date:No
U12	ON	Time of message:Yes
U13	OFF	Disable of poweron-prt:No
U14	OFF	Adjust of power down:No
U15	OFF	Mode of adjust:Model
U16	OFF	Decimal point(SD): .
U17	OFF	Rec OFF DATAP:No
U18	OFF	DI Logic:Normal

SoftDIPSW ENT ON/OFF

(3) Move the cursor to the parameter to be set with the ▲/▼ keys.

(4) Pressing the ENTER key switches ON/OFF.

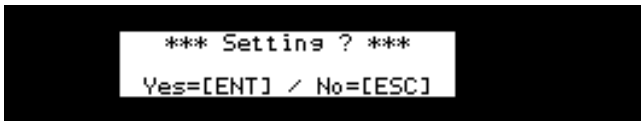

(5) Pressing the ESC key displays the confirmation screen. Press the ENTER key to register the settings.
The confirmation screen is displayed regardless of setting change.

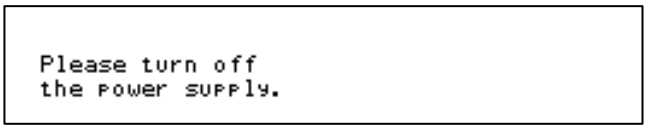

(6) Turn off the power after the setting in order to reflect the setting.

No.	Display contents of ON／OFF selecting	Contents of setting	Factory default
U01	OFF Language: Japanese ON Language: English	Display language OFF Japanese ON English	OFF
U02	OFF Rec ON Feed: No ON Rec ON Feed: Yes	5mm feed when recording is started OFF No feed ON Feed	OFF
U03	OFF Rec ON DatePrint: No ON Rec ON DatePrint: Yes	Print year, month, day, and time when recording is started OFF No print ON Print	OFF
U04	OFF Rec ON DateFormat: Normal ON Rec ON DateFormat: Special	Switch format of year, month, and day when power turns on, recording is started, and recording is finished. OFF Year, month, day, hour, minute ON Year, month, day	OFF
U05	OFF Rec OFF DatePrint: No ON Rec OFF DatePrint: Yes	Print year, month, day, and time or not when recording is finished OFF No print ON Print	OFF
U06	OFF Time Print Format: Normal ON Time Print Format: Special	Switch time format of fixed time printing OFF Hour, minute ON Year, month, day, hour, minute	OFF
U07	OFF Fixed Time Print: No ON Fixed Time Print: Yes	Print fixed time (except time line and time printing) OFF No print ON Print	ON
U08	OFF Time Print: No ON Time Print: Yes	Print time line and time printing of fixed time printing OFF No print ON Print	ON
U09	OFF DataInterval Format: Normal ON DataInterval Format: Special	Switch time format of periodic data printing OFF Hour, minute ON Year, month, day, hour, minute	OFF
U10	OFF WaitPosi&RibonSens: Dis ON WaitPosi&RibonSens: Ena	Ribbon standby position moving when dot print is finished * Note 1 OFF Every 6 points ON Every time	OFF
U11	OFF Feed After Date: No ON Feed After Date: Yes	5mm feed after year, month, and day printing when power turns on OFF No feed ON Feed	OFF
U12	OFF Time of message: No ON Time of message: Yes	Message print with additional information (Message No., hour, and minute) OFF No information ON With information	ON
U13	OFF Disable of poweron-prt: No ON Disable of poweron-prt: Yes	Select prohibition of year, month, and day printing when power turns on OFF Print ON No print	OFF
U14	OFF Adjust of power down: No ON Adjust of power down: Yes	Selection of chart correction during power failure * Note 2 OFF No correction ON Correction	OFF
U15	OFF Mode of adjust: Mode1 ON Mode of adjust: Mode2	Selection of chart correction mode during power failure OFF Mode 1 (No power failure time and recovering time printing) ON Mode 2 (Print power failure time and recovering time)	OFF
U16	OFF Decimal point (SD): . ON Decimal point (SD): ,	Decimal point position character of storing to SD card (TEXT format) OFF . (Period) ON , (Comma)	OFF
U17	OFF Rec OFF DATAP: No ON Rec OFF DATAP: Yes	Data print when recording is finished. OFF No print ON Print	OFF
U18	OFF DI Logic: Normal ON DI Logic: Reverse	Logic reverse of external contact signal OFF Normal ON Reverse	OFF

Note 1 **Ribbon standby position moving**

Ribbon cassette moves to standby position (backward) every 6 points. When setting ON (every time), check the nearest recoding result easily in order to move to standby position every time, however the life of ribbon select mechanism may be short.

Note 2 **Chart correction on power failure**

On power failure, chart feeding is corrected by fast-forwarding amount of chart feeding during power failure. When power failure is over 24 hours, remainder of chart after dividing 24 hours is fed. When setting correction mode 2, print power failure time and recovery time from power failure. When recording is not ON at recovering, chart correction and print is not performed.

Note 3 **Save of setting value and read to SD card**

Soft dip switch setting is not preformed save and read the setting value of SD card.

9. Adjustment

The unit provides three adjustment functions. Perform a suitable adjustment depending on the situation. All adjustments are processed in the software and mechanical adjustment such as trimmer adjustment is not performed.
Available adjustments are “trace printing position adjustment”, “input (measurement) adjustment” and “input (measurement) shift adjustment”.

9-1. Trace Printing (Dot Printing) Position Adjustment “Rec Adj”

Perform zero/span adjustment for trace printing position on a chart. This adjustment does not affect the measured value display or digital recording/printing. Before performing this adjustment, enable “Adjust of Rec position” according to “8-27. System Settings”. When it is enabled, “Rec Adj” is shown on the menu window (list of setting items).

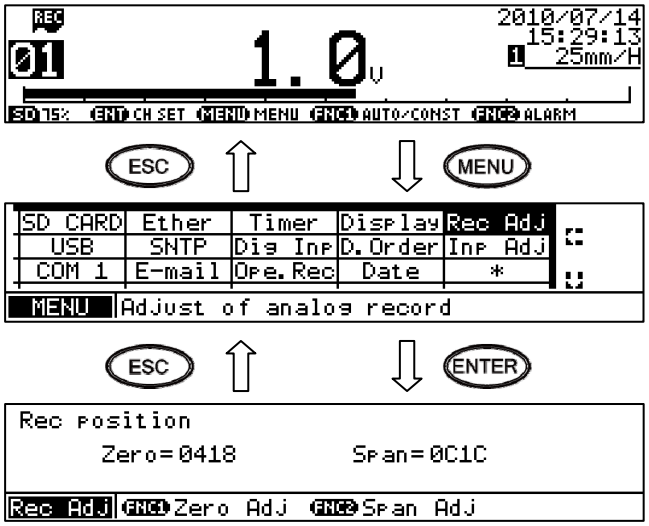

(1) Pressing the MENU key displays the menu window (list of setting items).

(2) Select “Rec Adj”.

(3) The zero and span values currently set are shown on this window. These values are replaced by new values when the ENTER key is pressed after completing the adjustments.

(4) Press the FUNC1 key to select zero, or the FUNC2 key to select span.

[Zero adjustment]

(5) Pressing the FUNC1 key moves the printer head to the zero side. Dotting starts while feeding the chart.
(6) Move the printer head with the ◀/▶ keys so that a dot is aligned with the chart 0% position.
(7) When the adjustment is completed, press the ENTER key to register the zero position.

[Span adjustment]

(5) Pressing the FUNC2 key moves the printer head to the span side. Dotting starts while feeding the chart.
(6) Move the printer head with the ◀/▶ keys so that a dot is aligned with the chart 100% position.
(7) When the adjustment is completed, press the ENTER key to register the span position.

(8) While the adjustment window is displayed, you can perform adjustment by pressing the FUNC1 key or FUNC2 key as many times as you need. When the adjustment is completed, press the ESC key to exit the trace printing position adjustment.

Note 1 **Dotting at zero/span side**

Unless the ◀/▶ key is pressed, dotting at 0% or 100% position is performed using the currently set adjustment data. When adjustment is not necessary, just press the ESC key.

Note 2 **Zero/span individual adjustment**

Zero and span can be adjusted separately.
To adjust the 0% position only, press the ESC key when the adjustment is completed.

9-2. Input Adjustment “Inp Adj”

Perform scale calibration to improve accuracy which may be degraded by the surrounding environment or over time. Zero/span adjustment is performed for input (measured) data of each channel. Before performing this adjustment, enable “Input Correction” according to “8-27. System Settings”. When it is enabled, “Inp Adj” is shown on the menu window (list of setting items).

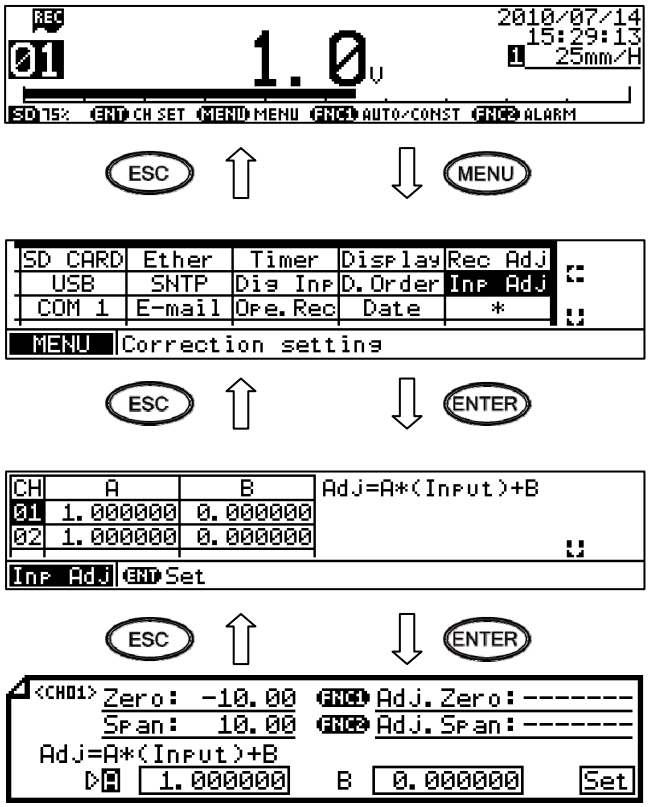

(1) Pressing the MENU key displays the menu window (list of setting items).

(2) Select “Inp Adj”.

(3) Move the cursor to the target channel with the ▲/▼ keys and press the ENTER key. The cursor does not move to parameters other than CH.
A tester should be connected to the target channel beforehand.

(4) The Zero and Span fields show respectively the range lower limit and range upper limit set in “8-2. Input Type Settings”.

[Zero input]

(5) Apply the range lower limit specified in the Zero field by the tester.

(6) Press the FUNC1 key to take the input.

[Span input]

(7) Apply the range upper limit specified in the Span field by the tester.

(8) Press the FUNC2 key to take the input.

(9) When zero and span inputs are completed, correction values will be displayed automatically at “A” and “B”. It is also possible to enter values directly to A (tilt) and B (intercept) using the ▲/▼/◀/▶ keys if you know these values.

(10) After completing the settings of this item, move the cursor to Set.

(11) Press the ENTER key to register the settings. To cancel the settings, press the ESC key.

Note 1 **Attach terminal cover**

The temperature of terminal varies when it is exposed to wind. Attach the terminal cover especially when using thermocouple input.

Note 2 **For instrument safety**

Energize the unit for at least 30 minutes before performing an adjustment.

9-3. Input Shift Adjustment

The amount of shift (parallel shift) for input (measurement) data can be adjusted. This adjustment is intended mainly to correct variance in sensor or input converter.
The adjustment can be performed for each channel. There are two types of setting as described below.

1. Set shift value in input type settings

After setting, measured value will be shifted by the specified amount.
(See “8-2. Input Type Settings”.)

Example of shift setting
Shift a measured value 850.3 to a set value 850.0 (850.0 - 850.3 = -0.3).

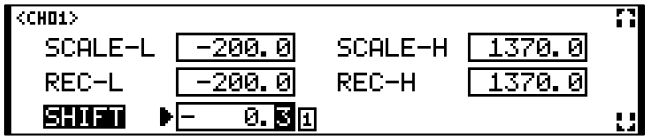

(1) Display the input type settings window shown on the left, and enter “-0.3” to the SHIFT entry field.
(2) After completing the setting, move the cursor to Set.
(3) Press the ENTER key to register the setting. To cancel the setting, press the ESC key.

2. Set shift value with “Inp Adj” described in the previous section

(See “9-2. Input Adjustment”.)

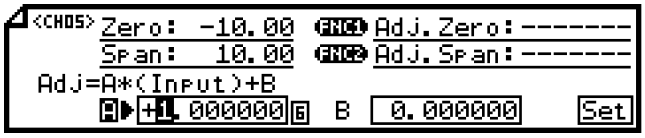

(1) Display the input adjustment window shown on the left, and enter “1” to the A parameter entry field and a shift value to the B parameter entry field.
If an input adjustment has already been performed and values have been specified in the A and B fields, add a shift value to the B parameter.
(2) After completing the setting, move the cursor to Set.
(3) Press the ENTER key to register the setting. To cancel the setting, press the ESC key.

Note 1 **Double setting**

When shift value is set on the input type settings window and also on the input adjustment window, the actual shift value will be the sum of the two set values.

Note 2 **Relation with input adjustment**

To set a shift value using the input adjustment described in the previous page, the SHIFT on the input type settings window should be set to “0”.

Note 3 **For instrument safety**

Energize the unit for at least 30 minutes before performing an adjustment.

9-4. Wiring and Environment for Input Adjustment

1. Preparation

(1) Turn OFF the power switch and perform the wiring depending on the input signal (see the figure below). Connect to the input terminal of the adjustment target channel.
(2) Attach the terminal cover.
(3) Turn ON the power switch and select the 1-point simultaneous display mode.
(4) Display the adjustment target channel.
(5) Energize the unit for at least 30 minutes (an hour or more is ideal) and then perform an adjustment.

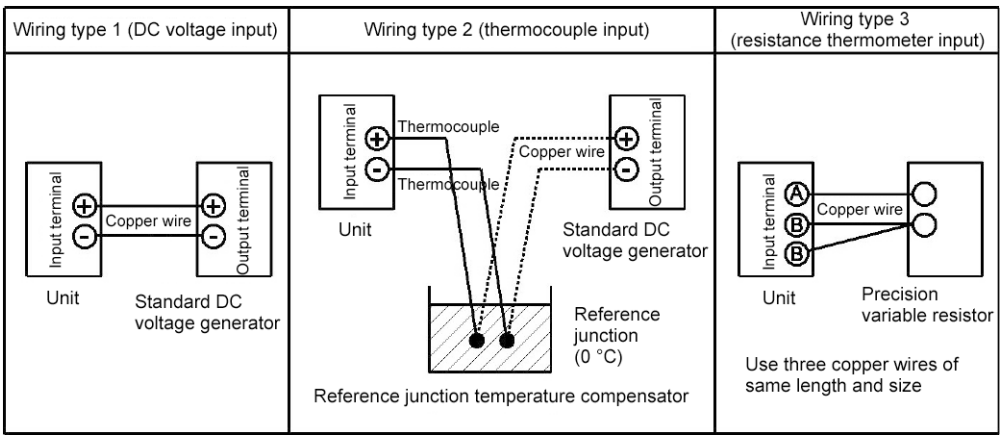

Note 1 **Tester accuracy**

The accuracy of the unit is ±0.1%. Therefore, you need to use a tester having higher degree of accuracy to perform proper adjustment. Also, attention should be paid to the thermocouple error.
Note that a tester requires time to be stabilized to ensure its accuracy and stability.

Note 2 **Reference junction compensator**

Make sure that the reference junction temperature is 0°C. When using an electronic reference junction compensator, read its instruction manual. Also, the compensation accuracy should be checked.

Note 3 **When reference junction temperature compensator (RJ) is not available**

When you use thermocouple input and set RJ to “INT”, perform the type 1 wiring if a reference junction temperature compensator is not available.
In this case, set RJ to “EXT” during adjustment only.
Note that error correction of reference junction temperature compensation cannot be performed.

2. How to adjust

(1) Set a tester (standard DC voltage generator or precision variable resistor) to an input value equivalent to the adjustment target value.
(2) At this time, read the digital display and check if the error is within the specified accuracy range.
(3) Next, change to the adjustment target channel and adjust it likewise.
(4) Adjust also the analog indication/dot printing position.

* The accuracy of the unit is rated at an ambient temperature of 23°C ±2°C. Ensure safety of the surrounding environment.
* When using the shift adjustment function to adjust measured value, the shifted value should be taken into account.
* When you change the wiring with the terminal cover removed, energize the unit for at least 30 minutes after attaching the terminal cover and then perform adjustment.

10. Engineering Port (Mini-USB Terminal)

An engineering port is provided in the front section of the unit to allow connection to a personal computer. This port is provided to all models as a standard feature.
Use a mini-USB cable to connect to a personal computer.

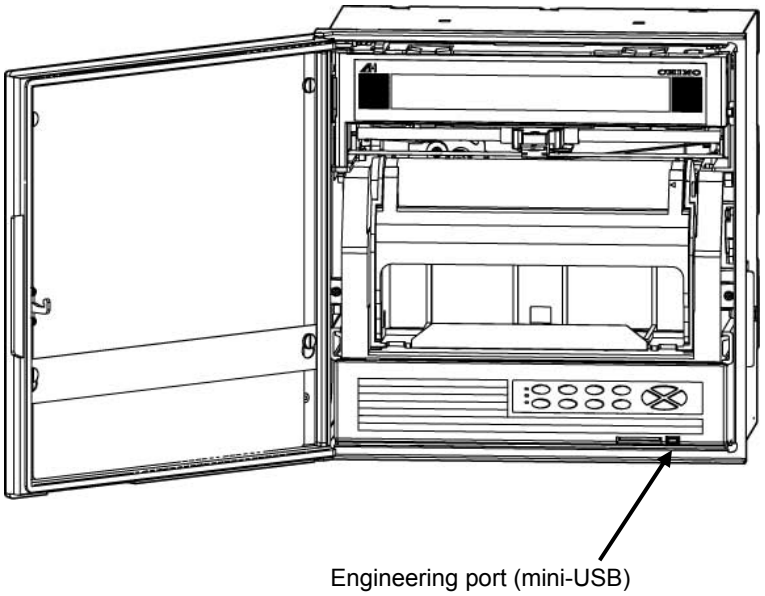

Note that this engineering port is designed for temporary communication connection and not intended for always-on connection. To obtain always-on connection for communication, you need to request the model with communication interface at the time of purchase, and use the terminal located at the rear side of the unit for permanent connection.

Caution	Make sure to attach or remove an engineering cable to/from the engineering port while the unit is turned on.

11. Troubleshooting

11-1. Problems and Remedies

The following table lists problems that may occurr on the unit (operations and functions) with description of the symptoms, their possible causes and remedies.

⚠ Warning	Never replace parts to repair or modify the unit. Not only does it fail to repair or modify, but it also may cause electric shock or damage to the unit.

Symptom	Cause/Remedy
(1) Unit does not function even the power switch is turned ON	(1) Check the wiring to the power terminal. (See “4-3.3. Power/protective conductor terminals wiring”.) (2) Make sure that the power voltage is 100 to 240V AC .
(2) Noise produced as printer moves	(1) Check if the ribbon cassette is attached properly. (See “6-1.2. How to attach ribbon cassette”.) (2) Open the unit door and check the printer moving area for foreign matter. Remove it if exists.
(3) Data displayed but not recorded	(1) Make sure that the recording is ON (“REC” status LED lights up). (See “6-2.4. Chart recording operation”.) (2) Check if the ribbon cassette is attached properly. (See “6-1.2. How to attach ribbon cassette”.) (3) Check if the chart is attached properly or if it has run out (“REC” status LED flashes). (See “6-1.1. How to set chart paper”.)
(4) Chart does not move as printer moves	(1) Feed the chart paper manually and make sure that the chart can be fed smoothly. (2) Make sure that the chart can be fed smoothly with the FEED key. (See “6-2.4. Chart recording operation”.)
(5) REC, DATAP, FEED keys not accepted	Check the system settings. (See “8-27. System Settings”.) While Key Lock is active, 🔒 is shown on the display.
(6) Range setting done, but data display or trace/digital printing not performed on a certain channel	(1) Check the setting (ON/OFF) of each operation in input type settings. (See “8-2. Input Type Settings”.) (2) Check the settings of dot printing. (See “8-8. Dot Printing Settings”.)
(7) Parameters set correctly, but not reflected on the window when checked	When a setting is changed while the chart recording is ON, a setting change mark is printed on a chart. Check the chart to see if it is printed. If not, the following situation is a possible cause. You have not pressed the ENTER key after moving the cursor to Set, or there was an error in the set contents.
(8) Parameters set correctly, but normal display does not return	
(9) Periodic data printing set, but not executed	(1) The start time set for periodic data printing has not come yet. (2) Parameters are not set correctly. (See “8-11 and 8-12. Periodic Data Printing Settings”.) * When you specify a start time which is earlier than the time of setting, periodic data printing will be executed from the next day at the specified time.
(10) Malfunction occurred unpredictably without warning	Initialize setting parameters. (See “8-27. System Settings”.) When the unit is recovered, set parameters again and see how it works.

11-2. Abnormal Measured Value

Symptom	Cause/Remedy
(1) Unstable measured value	(1) Check if the measuring terminal is loose. (2) Check if the input signal is unstable. (3) Make sure to avoid the following condition: BURN is set to other than “None” while connecting a thermocouple in parallel with another instrument.
(2) Measured value display shows the followings: OVER, BURN, etc.	(1) Make sure that the wiring to the input terminal is properly done. (2) Check if the input terminal is loose. (3) Check if the input line is disconnected. (4) Check if the input signal is out of the measuring range.
(3) Error occurs in measured value	(1) Check if error occurs in the input signal. (2) Make sure that a compensation lead wire is connected to the input terminal (thermocouple input only). (3) Check the scale and perform input adjustment if error occurs.
(4) Measured value influenced by ambient temperature (thermocouple input only)	(1) Check if RJ is set to “EXT” (external) in input type settings (this is not a problem if reference junction compensation is performed externally). (2) Make sure that the terminal cover is attached.

Important notice

If the troubleshooting does not help solving the problem, immediately contact the dealer or your nearest CHINO office and give the following information.
(1) MODEL (2) Serial number (3) Problem (4) Other concerns

12. Inspection and Maintenance

12-1. Routine Inspection

Check the remaining amount of chart and recording condition on a daily basis to keep the unit in good condition. When any abnormality is found, take an appropriate action according to the “11. Troubleshooting”.

Maintenance/inspection item	Operation
Ribbon cassette replacement	A ribbon cassette used for printing can last two to three months in continuous use, depending on the operating condition. When the print becomes less visible, replace the ribbon cassette with new one. (See “6-1.2. How to attach ribbon cassette”.)
Chart replacement	A chart paper can last about a month when fed at a speed of 25mm/H continuously. When the end of chart nears, an end mark (red line on the right edge of chart) appears. In this case, replace the chart with new one. (See “6-1.1. How to set chart paper”.)
Cleaning	Wipe away dirt on the unit with a soft, dry cloth or a cloth dampened with warm water or neutral detergent.

⚠ **Caution**	Do not use chemical solvents including thinner and benzine to prevent the unit surface from melting. The chart guide is made of acrylic. It may produce a crack when a chemical solvent is used.

⚠ **Caution**	Do not lubricate the mechanical section such as the main shaft and gear.

12-2. Consumable Parts and Replacement Guideline

The unit includes some consumable parts. To use the unit for a long time in good condition, we recommend that these parts be replaced regularly.

⚠ **Warning**	Do not replace parts other than chart and ribbon cassette by yourself. Not only does it fail to replace properly, but it also may pose dangerous situation. Make sure to contact CHINO’s sales agent for replacement of consumable parts.

1. Consumable parts and recommended replacement cycle

(Usage under the condition of temperature: 20 to 25°C, humidity: 20 to 80%RH, operation time: 8hours/ a day)

Consumable part		Replacement cycle	Other operating condition
Mechanical parts	Printer	4 to 6 years	Use under the normal condition as below: • No corrosive gas • Dust free, oil smoke free, dry place • Free from vibration and impact • No other factors affecting operation
	Printer main/sub axis and bearing	4 to 6 years	
	Belt	4 to 6 years	
	Chart drive mechanism	4 to 6 years	
	Ribbon select mechanism	4 to 6 years	
	Motors	4 to 6 years	
Electronic parts	Power supply	5 years	At an ambient temperature of 25°C
	Relay (for alarm)	100,000 times	Resistive load
		30,000 times	Inductive load
	Lithium battery	10 years	8-hour operation per day (at an ambient temperature of 40°C or lower)
	Keys	500,000 times	Depends highly on the use and surrounding conditions.
	Display (LCD)	4 to 6 years	At an ambient temperature of 25°C

12-3. The battery removal method for the purpose of disposal

⚠ **Caution**	Do not replace the battery. Doing so might cause damage or malfunction. Do not remove the battery, except when disposing the recorder.

1. Removing the battery

1) Removing the internal chassis
   (1) Open the unit door and then open the display board in the same direction.
   (2) Turn OFF the power switch.
   (3) Remove two screws fixing the internal chassis.
   (4) Remove one screw fixing the mechanical side panel and then pull out the internal chassis.
   (5) Remove two screws fixing the front unit of chassis and pull it out.

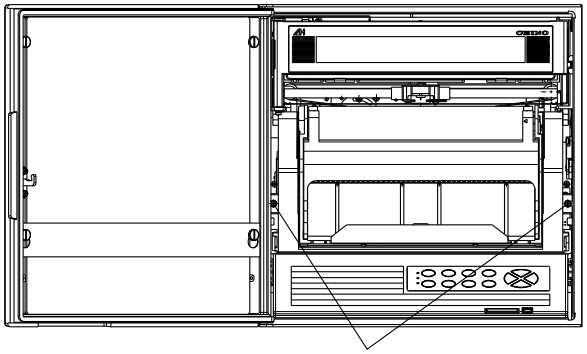

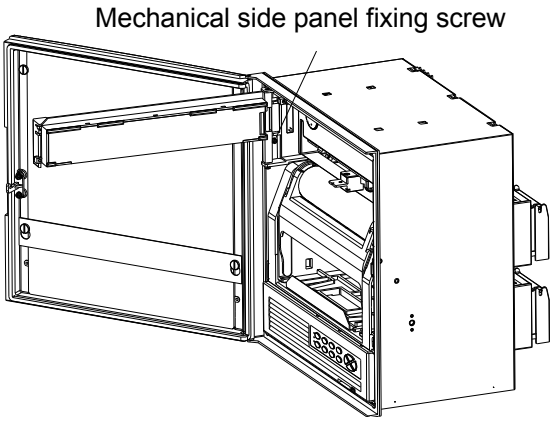

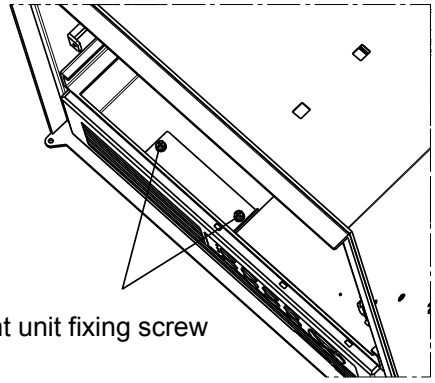

2) Removing the battery

(1) The battery is located at the back of the chassis front unit.

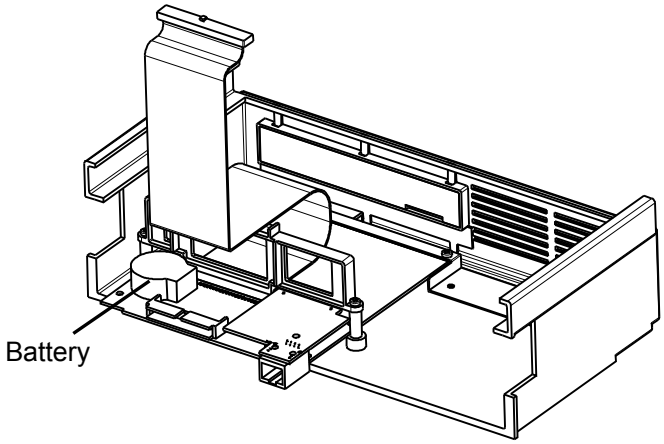

(2) Using a tapered, insulated tool, remove the battery from the battery holder.

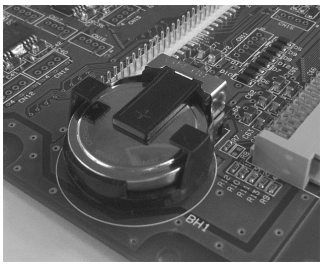

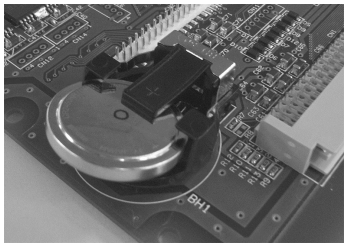

⚠ **Caution**	(1) The unit components include a small amount of harmful chemical substance no more than the defined amount by RoHS. (2) The unit must be disposed of by a waste disposal company or in accordance with the local regulations. (3) The unit uses a lithium battery and the battery must be disposed of by a waste disposal company. (4) The packing materials used for the unit, such as box, plastic bag, cushion and sticker, should be sorted for recycling in accordance with local regulations.

13. Option

13-1. External Operation Settings “Dig Inp”

Using remote contact signal (no-voltage contact: short or open), selection of chart speed or data printing can be executed without operating keys at the operation/set keys section. To use this function, you need to allocate operation to a terminal number. Some operations are allocated automatically to specific terminal numbers.

1. Names of the operations executed externally

Operation name	Terminal used
(1) Select chart speed from three speeds	EX1 and EX2 terminals
(2) Message printing (No.01 and 02)	EX1 and EX2 terminals
(3) Message printing (No.01 to 05)	EX1 to EX4 terminals
(4) Data printing	One arbitrary terminal (multiple selection available)
(5) List printing (List No.1, 2 and 3)	One arbitrary terminal (multiple selection available)
(6) Integration value reset	One arbitrary terminal (multiple selection available)
(7) Message printing (No.01 to No.20)	One arbitrary terminal (multiple selection available)
(8) Time correction	One arbitrary terminal (multiple selection available)

2. Operation and terminal contact signal

1) Operations allocated automatically to specific terminal numbers ON: short OFF: open

<table>
<tr><th>Operation name</th><th>Terminal contact signal</th></tr>
<tr><td>(1) Select chart speed from three speeds</td><td>Three chart speeds should be set as well as the setting described in this section.
(See “8-7. Chart Speed Settings”.)
<table>
<tr><th colspan="2" rowspan="2">Recording ON/OFF and chart speed selection</th><th colspan="2">Between COM and EX ☐ terminal</th></tr>
<tr><th>EX1</th><th>EX2</th></tr>
<tr><td rowspan="3">Recording ON</td><td>CS1</td><td>OFF</td><td>OFF</td></tr>
<tr><td>CS2</td><td>ON</td><td>OFF</td></tr>
<tr><td>CS3</td><td>OFF</td><td>ON</td></tr>
<tr><td colspan="2">Recording OFF</td><td>ON</td><td>ON</td></tr>
</table>
Chart recording should be ON to enable chart speed selection.</td></tr>
<tr><td>(2) Message printing (No.01 and 02)</td><td>Message should be set as well as the setting described in this section.
(See “8-14. Message Printing 1 Settings”.)
<table>
<tr><td>Message No.01</td><td>COM and EX1</td><td rowspan="2">For trigger
 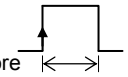
1 sec or more</td></tr>
<tr><td>Message No.02</td><td>COM and EX2</td></tr>
</table>
A selected message will be printed when a trigger signal (1sec or longer) is given.
Message printing can be executed also by keys.</td></tr>
<tr><td>(3) Message printing (No. 01 to 05)</td><td>Message should be set as well as the setting described in this section.
(See “8-14. Message Printing 1 Settings”.)
<table>
<tr><th rowspan="2">Message</th><th colspan="4">Between COM and EX ☐ terminal</th></tr>
<tr><th>EX1</th><th>EX2</th><th>EX3</th><th>EX4*</th></tr>
<tr><td>No.01</td><td>OFF</td><td>OFF</td><td>OFF</td><td rowspan="5">For trigger
 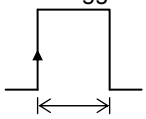
1sec or more</td></tr>
<tr><td>No.02</td><td>ON</td><td>OFF</td><td>OFF</td></tr>
<tr><td>No.03</td><td>OFF</td><td>ON</td><td>OFF</td></tr>
<tr><td>No.04</td><td>ON</td><td>ON</td><td>OFF</td></tr>
<tr><td>No.05</td><td>OFF</td><td>OFF</td><td>ON</td></tr>
</table>
* A selected message will be printed when a trigger signal (1sec or longer) is given after selecting message No.
Chart recording should be ON to enable message printing.
Message printing can be executed also by keys.</td></tr>
</table>

2) Operations allocated to arbitrary terminal numbers ON: short OFF: open

Operation name	Terminal contact signal 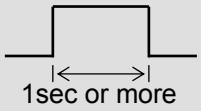
(4) Data printing	Turn ON the terminal No. specified for data printing. Chart recording should be ON. Data printing can be executed also by keys. While executing data printing, another execution request can be accepted.
(5) List printing (List No.1, 2 and 3)	Turn ON the terminal No. specified for list 1, 2 and 3 printing. Chart recording should be ON. List printing can be executed also by keys. (See “8-13. List Printing Settings”.)
(6) Integration value reset	When “EX (All)” is selected for INT-Reset in calculation settings, integration value can be reset by turning ON the terminal No. specified for integration reset. (See “8-4. Calculation Settings”.)
(7) Message printing (No.01 to No.20)	Message should be set as well as the setting described in this section. (See “8-14. Message Printing 1 Settings”.) Turn ON the terminal No. specified for message printing (No.01 to 20). Chart recording should be ON. Message printing can be executed also by keys.
(8) Time correction	When the current time (second) is 0 to 30, the second value will be set to 0. When it is 31 to 59, the minute value will be increased by 1min and the second value will be set to 0. Example: Turn On the specified terminal No. at 10:10 and 30 seconds. The time will be set to 10:10:00. It will be 10:11:00 when the terminal is turned ON at 10:10 and 31 seconds.

Warning	For external terminal contact signal, use a switch or relay operated at 30V AC, 60V DC or lower voltage level, or manually operated contact which can handle minute load.

3. Parameter settings

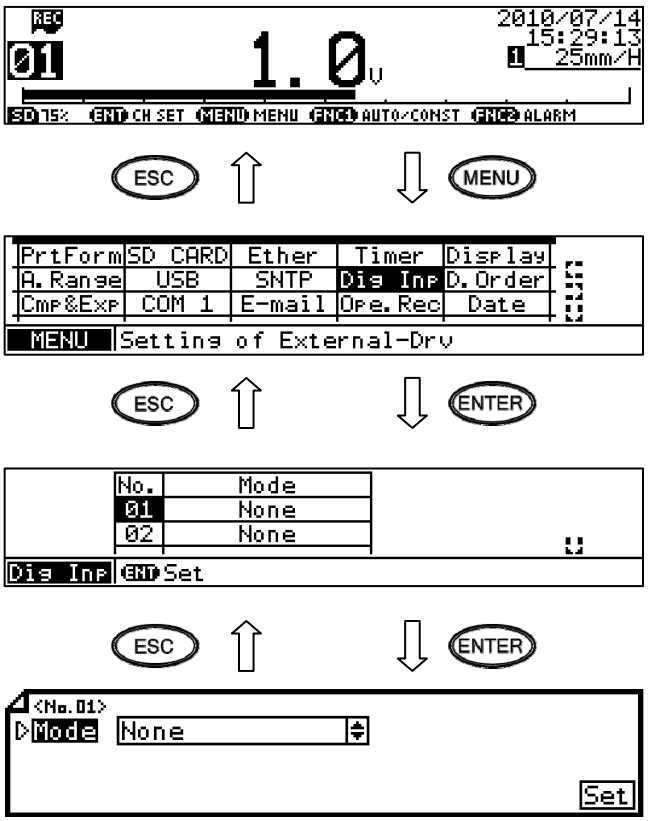

(1) Pressing the MENU key displays the menu window (list of setting items).

(2) Select “Dig Inp”.

(3) Move the cursor to the target remote contact No. with the ▲/▼ keys and press the ENTER key. The cursor does not move to parameters other than No.

(4) Press the ENTER key to make it available for setting and then select a value.

(5) After completing the setting, move the cursor to Set.

(6) Press the ENTER key to register the setting (when chart recording is ON, a setting change mark is printed). To cancel the setting, press the ESC key.

[Dig Inp setting parameter]

Parameter	Function	Default	Set value
Mode	Allocate function to specified remote contact terminal No.	None	None (not used), ChartSpeed (chart speed), Message 1,2 (message 1 & 2 printing), Message 1to5 (message 1 to 5 printing), DataPrint, ListPrint 1 (list 1 printing), ListPrint 2 (list 2 printing), ListPrint 3 (list 3 printing), INT-Reset(All) (integration reset), Clock Adj (time correction), Message 1 (message 1 printing) to Message 20 (message 20 printing)

13-2. Operation Recording Settings “Ope.Rec”

* When using this function, do not set dot printing interval settings “Dot.Int” to “Synchro” (see 8-10). If it is set to “Synchro” this function becomes disabled.

The ON/OFF status of the remote contact input (No. 1 to 20: depending on the specification) can be recorded to chart.
For a target remote contact No., specify the recording position for input OFF status (percentage value of chart span) and the recording position for input ON status by an offset (1 to 10mm) from the OFF position.
When the input is ON, recording is made on the right side of the input OFF recording position, at the position specified by an arbitrary offset width.
At this time, a straight line connects between ON and OFF.

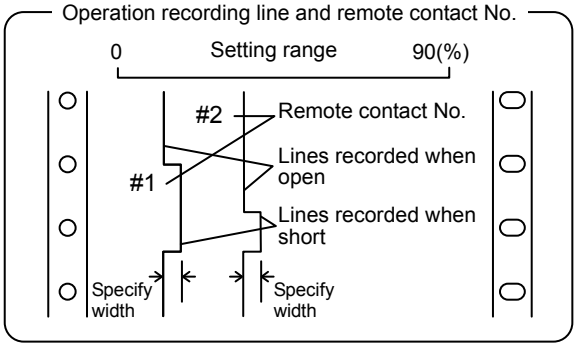

(1) Pressing the MENU key displays the menu window (list of setting items).

(2) Select “Ope.Rec”.

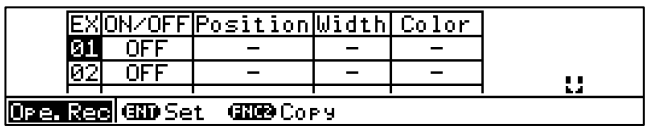

(3) Move the cursor to the target remote contact No. with the ▲/▼ keys and press the ENTER key. The cursor does not move to parameters other than EX.
Also, pressing the FUNC2 key on this window displays the copy window for operation recording settings.

(4) Move the cursor to the parameter to be set with the ▲/▼/◀/▶ keys.
(5) Press the ENTER key to make it available for setting and then select or enter a value.
(6) After completing the settings of this item, move the cursor to Set.
(7) Press the ENTER key to register the settings (when chart recording is ON, a setting change mark is printed). To cancel the settings, press the ESC key.

[List of Ope.Rec setting parameters]

Parameter	Function	Default	Set value
ON/OFF	Select ON or OFF for operation recording	OFF	ON (enabled), OFF (disabled)
Position	Set recording position for input OFF status to percentage of chart zero span	*	0 to 90 (%)
Width	Set recording position for input ON status to millimeters of chart zero span based on the input OFF recording position.	*	1 to10 [mm]
Color	Select color used for recording	*	Red, Black, Blue, Green, Brown, Purple

13-3. COM Port Settings “COM1” and “COM2”

COM port 1 and COM port 2 can be set separately to use them simultaneously. These ports are mainly used to set the unit using PLC or PC, and load measured data.
This section describes the things related to settings only. For general handling information, refer to the instruction manual for “Communication Interface” provided separately.

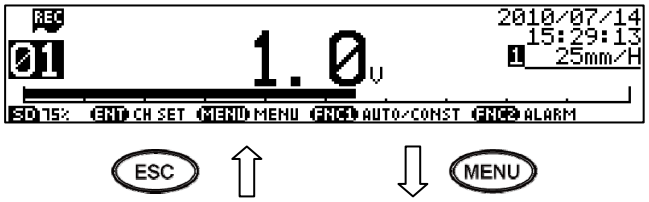

(1) Pressing the MENU key displays the menu window (list of setting items).

(2) Select “COM1” or “COM2”.

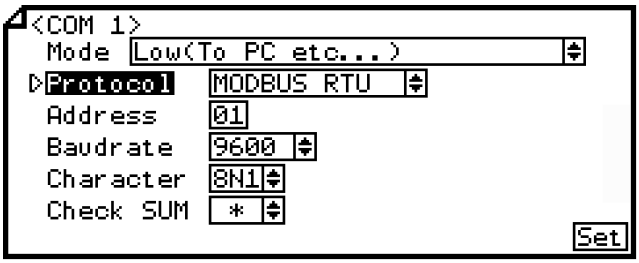

Note: Actual windows are separated. Use the ▲/▼ keys to scroll and continue settings.

(3) Move the cursor to the parameter to be set with the ▲/▼/◀/▶ keys.
(4) Press the ENTER key to make it available for setting and then select or enter a value.
(5) After completing the settings of this item, move the cursor to Set.
(6) Press the ENTER key to register the settings (when chart recording is ON, a setting change mark is printed). To cancel the settings, press the ESC key.

[List of COM1 and COM2 setting parameters]

Parameter	Function	Default	Set value
Mode	Communication mode	Low (To PC etc…)	Fixed to Low (To PC etc…)
Protocol	Select communication protocol	MODBUS RTU	MODBUS RTU, MODBUS ASCII, PRIVATE1 (without connection sequence), PRIVATE2 (with connection sequence)
Address	Set communication address of the unit	01	01 to 99
Baudrate	Set communication speed	9600	PRIVATE: 1200, 2400, 4800, 9600bps MODBUS: 9600, 19200, 38400bps Changes to “9600” when changing from PRIVATE to MODBUS or vice versa.
Character	Set transmission character	8N1	7E1, 7E2, 7O1, 7O2, 8N1, 8N2, 8E1, 8E2, 8O1, 8O2
Check SUM	Select whether to add checksum code	*	OFF, ON Settable only when Protocol is set to “PRIVATE”.

Reference **Character selection**

Codes are used to represent character type.

Code	Character length	Parity	Stop bit	Code	Character length	Parity	Stop bit
7E1	7-bit	Even	1	8N2	8-bit	Non	2
7E2	7-bit	Even	2	8E1	8-bit	Even	1
7O1	7-bit	Odd	1	8E2	8-bit	Even	2
7O2	7-bit	Odd	2	8O1	8-bit	Odd	1
8N1	8-bit	Non	1	8O2	8-bit	Odd	2

13-4. IP Address etc… Settings “Ether”

Set basic parameters necessary for communication using the Ethernet interface.
This section describes the things related to settings only. For general handling information, refer to the instruction manual for “Communication Interface” provided separately.

(1) Pressing the MENU key displays the menu window (list of setting items).

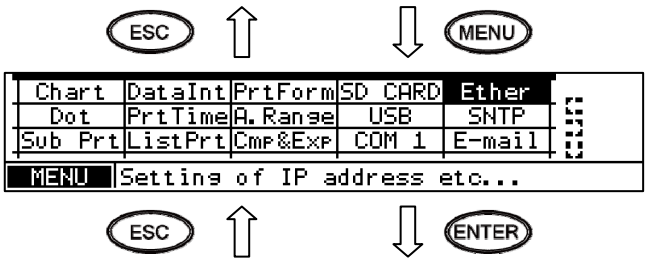

(2) Select “Ether”.

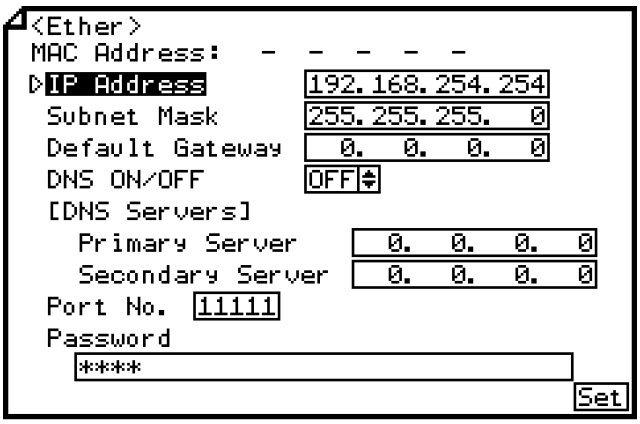

(3) Move the cursor to the parameter to be set with the ▲/▼/◀/▶ keys.

(4) Press the ENTER key to make it available for setting and then select or enter a value.

(5) After completing the settings of this item, move the cursor to Set.

(6) Press the ENTER key to register the settings (when chart recording is ON, a setting change mark is printed). To cancel the settings, press the ESC key.

Note: Actual windows are separated. Use the ▲/▼ keys to scroll and continue settings

[List of Ether setting parameters]

Parameter	Function	Default	Set value
MAC Address	Ethernet MAC address of the unit	Unique value	Setting disabled
IP Address	Set IP address	192.168.254.254	**:**:**:** (each ** area is set to 0 to 255)
Subnet Mask	Set subnet mask	255.255.255.0	**:**:**:** (each ** area is set to 0 to 255)
Default Gateway	Set default gateway address of the network used	0.0.0.0	**:**:**:** (each ** area is set to 0 to 255)
DNS ON/OFF	Select whether to use DNS (domain name server)	OFF	OFF (not used), ON (used) Set server like SNTP and SMTP by the name when using DNS, or by the IP address when not using DNS.
[DNS Servers] Primary Server	Set primary DNS server	0.0.0.0	**:**:**:** (each ** area is set to 0 to 255)
Secondary server	Set secondary DNS server	0.0.0.0	**:**:**:** (each ** area is set to 0 to 255)
Port No.	Set port No. for socket communication by TCP/IP	11111	0 to 65535
Password	Set a password consisting of up to 32 characters used for setting on the Web	3571	

Reference **Example settings for small network**

To use the unit in a small network using a router without connecting to internal LAN or internet, set the IP address as shown below.

Unit	IP address	Subnet mask
AH4000 A	192.168.254.254	255.255.255.0
AH4000 BB	192.168.254.253	255.255.255.0
. . .	. . .	. . .
PC A	192.168.254.1	255.255.255.0
PC B	192.168.254.2	255.255.255.0
. . .	. . .	. . .

13-5. SNTP Settings “SNTP”

Set SNTP related parameters for Ethernet interface. Specify whether or not to use SNTP, server to be used and query time. When SNTP is set to “ON”, a query is sent to the server according to the setting. When the time is obtained normally, it will be set automatically.
This section describes the things related to settings only. For general handling information, refer to the instruction manual for “Communication Interface” provided separately.

(1) Pressing the MENU key displays the menu window (list of setting items).

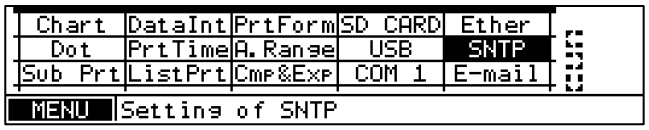

(2) Select “SNTP”.

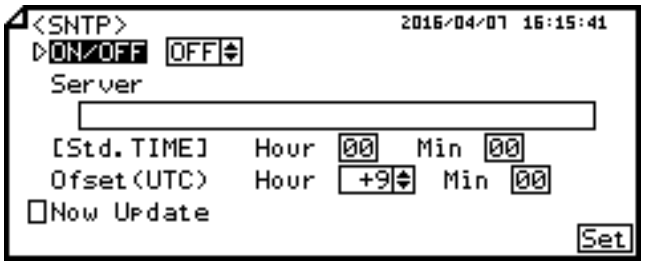

Note: Actual windows are separated. Use the ▲/▼ keys to scroll and continue settings

(3) Move the cursor to the parameter to be set with the ▲/▼/◀/▶ keys.
(4) Press the ENTER key to make it available for setting and then select or enter a value.
(5) After completing the settings of this item, move the cursor to Set.
(6) Press the ENTER key to register the settings (when chart recording is ON, a setting change mark is printed). To cancel the settings, press the ESC key.

[List of SNTP setting parameters]

Parameter	Function	Default	Set value
ON/OFF	Set whether or not to use time setting function by SNTP	OFF	OFF (not used), ON (used)
Server	Set SNTP server name or IP address using 32 characters maximum	Not set	Set server name when DNS is used. Set server IP address when DNS is not used.
[Std.TIME]	Set reference time for query	00:00	00:00 to 23:59
Of set (UTC)	Set (time) difference between regional time of this unit is used and universal time.	+9:00	-18:59 to +18:59
Now Update	Obtain the time immediately after confirming settings by Set		Check the check box to enable the function.

13-6. E-mail Settings “E-mail”

Set E-mail transmission related parameters for Ethernet interface. E-mail can be sent when alarm or time event occurs. This section describes the things related to settings only. For general handling information, refer to the instruction manual for “Communication Interface” provided separately.

1. Account setup

Set up necessary items for E-mail transmission such as transmission server and mail account. Although E-mail receiving function is unavailable, POP3 server needs to be set since POP3 authentication is required in some cases at transmission.

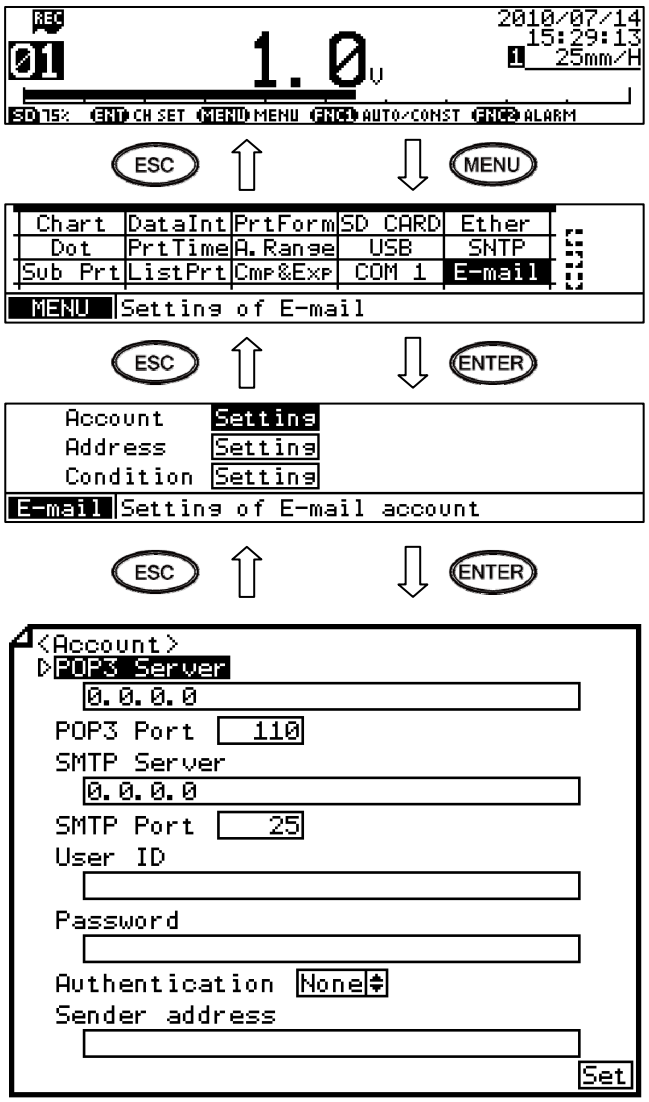

(1) Pressing the MENU key displays the menu window (list of setting items).

(2) Select “E-mail”.

(3) Make sure that the cursor is on Setting beside “Account”, and press the ENTER key.

(4) Move the cursor to the parameter to be set with the ▲/▼/◀/▶ keys.

(5) Press the ENTER key to make it available for setting and then select or enter a value.

(6) After completing the settings of this item, move the cursor to Set.

(7) Press the ENTER key to register the settings (when chart recording is ON, a setting change mark is printed). To cancel the settings, press the ESC key.

Note: Actual windows are separated. Use the ▲/▼ keys to scroll and continue settings

[List of E-mail Account setting parameters]

Parameter	Function	Default	Set value
POP3 Server	Set server name or IP address used for POP3 authentication using 32 characters maximum	Not set	Set server name when DNS is used. Set server IP address when DNS is not used.
POP3 Port	Set POP3 server port No.	110	Fixed to 110
SMTP Server	Set SMTP server name or IP address using 32 characters maximum	Not set	Set server name when DNS is used. Set server IP address when DNS is not used.
SMTP Port	Set SMTP server port No.	25	Fixed to 25
User ID	Set mail account using 32 characters maximum	Not set	
Password	Set mail password using 32 characters maximum	Not set	
Authentication	Select authentication type for accessing transmission server	None	None, POP, APOP
Sender address	Set sender mail address using 32 characters maximum	Not set	

2. Address setting

Set the destination address. E-mail can be sent to up to three different addresses.

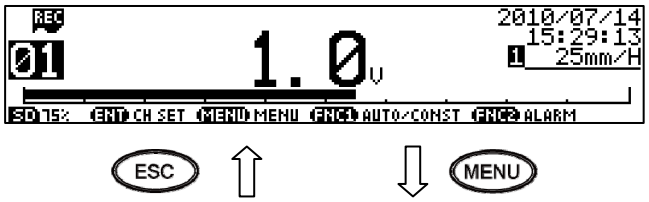

(1) Pressing the MENU key displays the menu window (list of setting items).

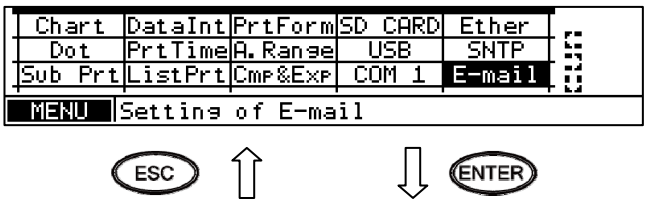

(2) Select “E-mail”.

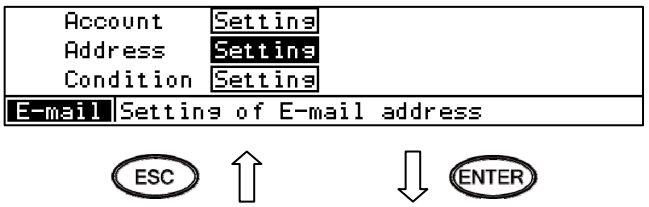

(3) Move the cursor to Setting beside “Address” and press the ENTER key.

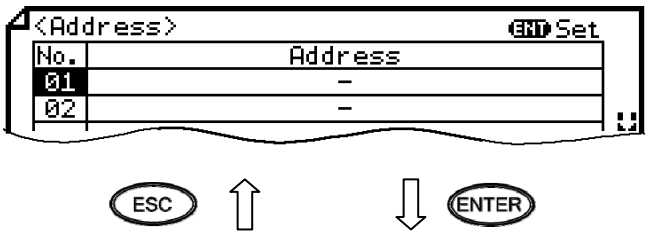

(4) Move the cursor to the target address No. with the ▲/▼ keys and press the ENTER key. The cursor does not move to parameters other than No.

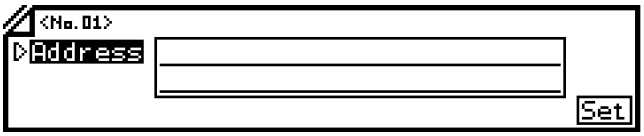

(5) Press the ENTER key to make it available for setting and then enter a destination address.

(6) After completing the setting of this item, move the cursor to Set.

(7) Press the ENTER key to register the setting (when chart recording is ON, a setting change mark is printed). To cancel the setting, press the ESC key.

[E-mail Address setting parameter]

Parameter	Function	Default	Set value
Address	Set destination address for E-mail using 32 characters maximum	Not set	

3. Transmission condition setting

Set the E-mail transmission condition. E-mail can be sent at alarm activation (when alarm is activated on the specified channel), at set time (at every interval from reference time) or at occurrence of event like chart end (see “8-23. Fail Output Settings”). Up to six conditions can be registered.

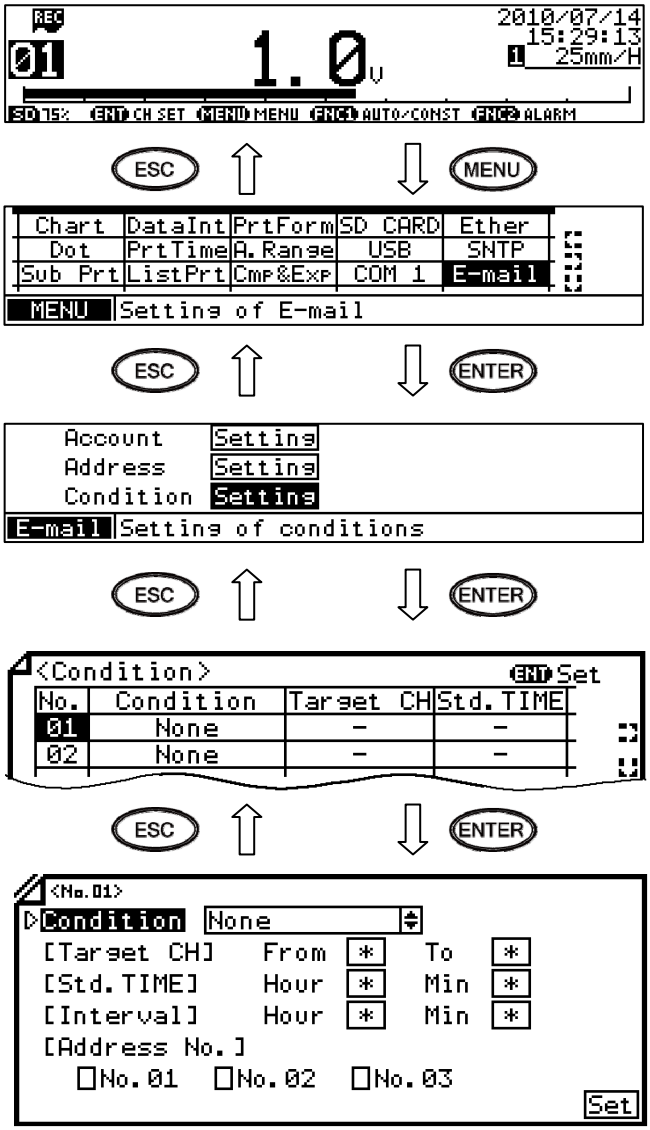

Note: Actual windows are separated. Use the ▲/▼ keys to scroll and continue settings

(1) Pressing the MENU key displays the menu window (list of setting items).

(2) Select “E-mail”.

(3) Move the cursor to Setting beside “Condition” and press the ENTER key.

(4) Move the cursor to the target condition No. with the ▲/▼ keys and press the ENTER key. The cursor does not move to parameters other than No.

(5) Move the cursor to the parameter to be set with the ▲/▼/◀/▶ keys.

(6) Press the ENTER key to make it available for setting and then select or enter a value.

(7) After completing the settings of this item, move the cursor to Set.

(8) Press the ENTER key to register the settings (when chart recording is ON, a setting change mark is printed). To cancel the settings, press the ESC key.

[List of E-mail Condition setting parameters]

Parameter	Function	Default	Set value
Condition	Select E-mail transmission condition	None	None (not used), Alarm (at alarm activation), Interval (send measured value at fixed intervals), FailOut
[Target CH]	Set beginning and end of target CHs to send e-mail for alarm activation or measured value	*	1 to 24
[Std.TIME]	Set reference time for sending measured data	*	00:00 to 23:59
[Interval]	Set interval for sending measured data	*	00:00 to 24:59
[Address No.]	Select destination address for each condition		Select up to three addresses from those set in the previous section by checking desired address No.

Reference **Interval setting**

E-mail is sent at the following time: reference time + (interval x n) n = 0, 1, 2, 3…

Example: [Std.TIME] is set to “00:00” and [Interval] is set to “04:00”

E-mail will be sent at 00:00, 04:00, 08:00, 12:00, 16:00 and 20:00.

13-7. Low Order Communication

Low order communication is a function that this instrument work as a high order device of the communication and read data from device that is connected as a low order device according to the contents set in advance then display/record data as data of this instrument. For the communication between this instrument and lower side device, use COM 2 port and establish serial communication based on RS-485 communication standard.
Also, measured/calculation data of this instrument can be written to the low order device (PLC).

1. Wiring

As shown in below, connect COM 2 communication terminal of this instrument and communication terminal of low order device. For details of wiring, refer to the Instruction Manual [Communication Interface] and [Installation/Wiring]. For wiring method of low order device, refer to the Instruction Manual of each device. Cable should be within 1.2km of total extension and up to 5 low order devices can be connected. Install resistance of 100Ω to the both ends of transmission line. (It can be general metal film resistors. They are also available from us so contact us when needed.)

■ Communication Terminal

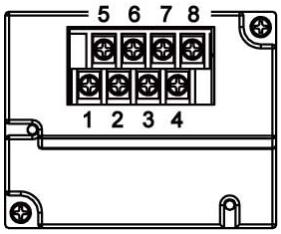

No.	COM2 RS-485
1	SA
2	SB
3	SG

■ Example of Wiring 1

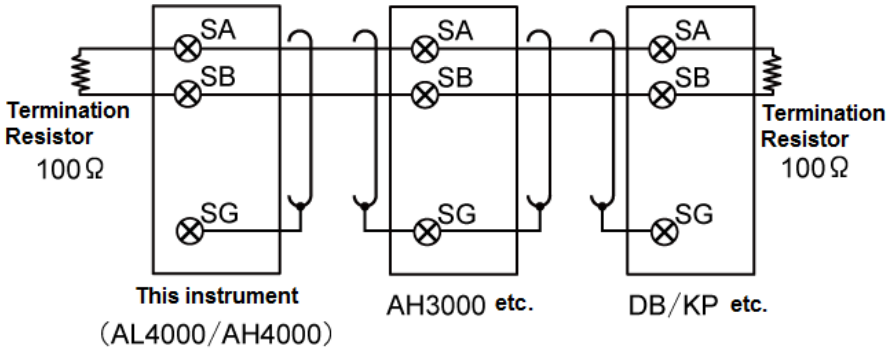

■ Example of Wiring 2 (SYSMAC in use)

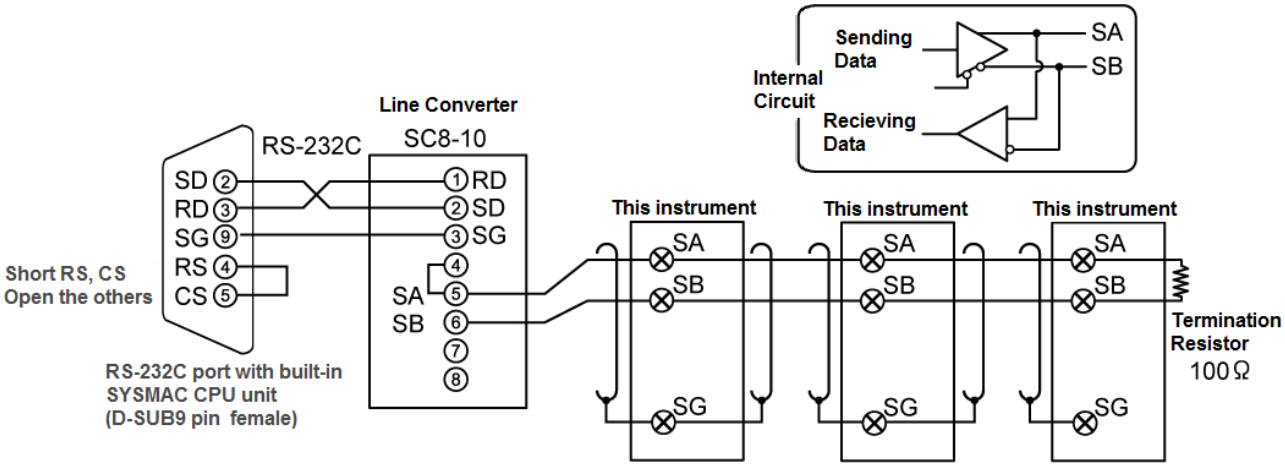

*Only one device can be operated as a high order device.

2. COM2 Communication Settings “COM2”

Low order communication is only corresponding to COM2 port. Low order communication function is enabled by setting COM2 communication mode to “High (To DB/KP etc…)”

(1) Press the ENTER key to display the menu window (list of setting items).

(2) Select “COM2”.

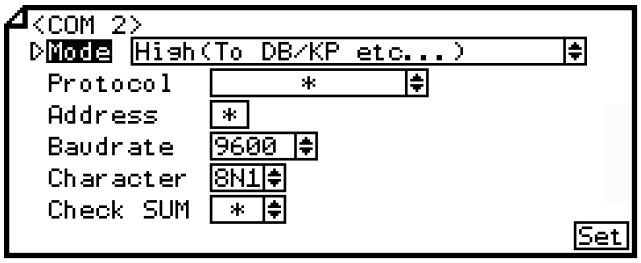

(3) Press ENTER key to make it available for setting and then select “High (To DB/KP etc…)” by ▲/▼ key.

(4) Move the cursor to Set.

(5) Press ENTER key to register the settings (when chart recording is ON, a setting change mark is printed). To cancel the settings, press ESC key.

Note: Actual windows are separated. Use ▲/▼ keys to scroll and continue settings.

[List of COM2 setting parameters]
Default and set value of each setting parameter are when communication mode is set to [“”].
Refer to the Instruction Manual [General] “13-3. COM Port Settings ‘COM1’ and ‘COM2’” about high order communication mode.

Parameter	Function	Default	Set value
Mode	Communication mode	Low (To PC etc…)	Low (To PC etc…) : This instrument is low order instrument and high order communication mode. High (To DB/KP etc…) :This instrument is high order device and low order communication mode
Protocol	Select communication protocol	*	
Address	Set communication address of the instrument	*	
Baudrate	Set communication speed	9600	Fixed to 9600bps
Character	Set transmission character	8N1	Fixed to 8N1 (8bit/ no parity/ stop 1bit)
Check SUM	Select whether to add checksum code	*	

3. Low Order Communication (Read)

1) Overview

Low order communication (read) is a function that this instrument work as a high order device and display/record collected data of CHINO device or PLC connected as low order device. Within the instrument, collected data can be handled same as input data.
By setting the communication mode of COM2 port as “High (To DB/KP etc…)”, read data of connected low order device and display/record as data of each CH.

Data request to the each device is about 1 sec (all points for one device) *1. If 5 devices are connected to the low order side, data update interval is about 5 sec. *2.

*1 For only JW, data update interval differs depending on reading points.

Less than 10 points	: number of connected low order device x 1 (sec.)
10 to 13 points	: number of connected low order device x 2 (sec.)
More than 13 points	: number of connected low order device x 3 (sec.)

*2 Except JW

*3 Data of following PLC by Mitsubishi Electric can be read.

- MELSEC AnACPU Series
- MELSEC QnACPU Series
- MELSEC QnASCPU Series
- MELSEC QCPU Series
- MELSEC FX Series

Communication unit etc. corresponding to communication control procedure model 4 is necessary.
Readable register as follow

- D0000 to D1023
- M0000 to M2047

*4 Data of following PLC by OMRON can be read.

- Device corresponding to SYSMAC C mode command communication.

Readable channel as follow

- Data Memory (DM) area : D0000 to D9999
- CIO (input/output relay etc.) area : 0 to 6143

Line converter (CHINO’s model: SC8-10) same number of PLC is necessary for communication with PLC by OMRON.

Device connectable to low order side

1. AL4000
2. AH4000
3. LT230
4. LT350/370
5. LT450/470
6. LT830
7. DB1000/2000
8. DP1000G
9. KP1000/2000
10. JU
11. JW
12. MELSEC Series *3
13. SYSMAC Series *4

■ Low order communication (read) specification overview

Number of connectable device	:	Maximum 5 devices
Maximum display points	:	AL4000: 12 points/AH4000: 24 points However, common to input CH.
Data update interval	:	About 1 sec. for 1 device. * Display update upon this instrument may delay due to the status of data update and communication response delay of low order device.
Communication time out	:	About 1 sec. for the each device (no retry). At this point, previous value is kept for the data (default value is invalid data). * Display “ERR” when the device generated communication time out more than 60 sec. continuously.

2) Procedure of Connection Setting

After the wiring of low order communication port of this instrument and low order device, follow the procedure and set this instrument (high order device) and low order device.

(Termination resistor is installed to one end of normal communication line or the devices placed at the both ends, however, there is a case that it is better not to install the termination resistor depending on the environment.)

<Connection Example>

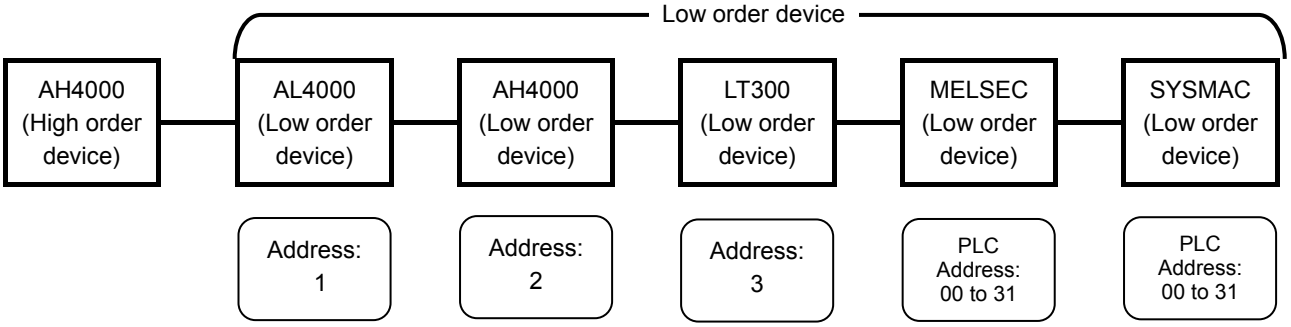

3) Low Order Device Setting

(1) Set the communication address (device number) of low order device not to overlap with each other.

CHINO's device 0 to 99

PLC 0 to 31 (PLC Address is arbitrarily number that is not overlap with each other)

(2) Perform communication setting of each low order device by following specification.

Refer to the Instruction Manual of each device about setting method.

Communication Speed	9600bps
Data Length	8bit
Parity	None
Stop Bit	1bit

4) Register to the Instrument

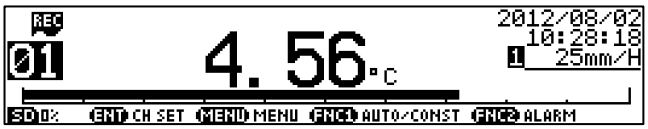

(1) Press ENTER key to display the menu window (list of setting items).

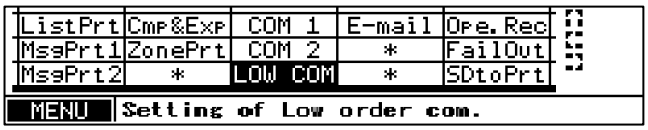

(2) Select "LOW COM".

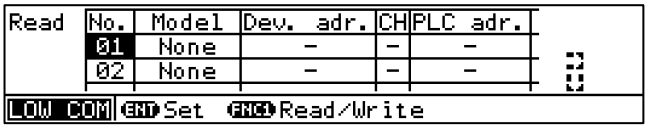

(3) Press FUNC1 key to switch Read/Write. Select "Read (reading device setting)".

Move the cursor to the No. of registering connecting device by ▲/▼ key and press ENTER key to select.

The cursor does not move to the parameter except for the No.

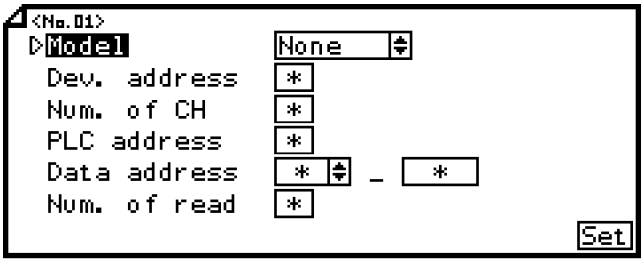

Note: Actual windows are separated. Use ▲/▼ keys to scroll and continue settings.

(4) Move the cursor to the parameter to set by ▲/▼/◀/▶ key.

(5) Press ENTER key to make it available for setting and then select a value or enter a value.

(6) After completing the setting of this item, move the cursor to Set.

(7) Press ENTER key to register the settings (when chart recording is ON, a setting change mark is printed). To cancel the settings, press ESC key.

[List of LOW COM (Read) setting parameters]

Parameter	Function	Default	Set Value
Model *1	Select device connect as low order.	None	None(None), AL/AH, LT2/3/8, LT4, DB, DP-G, KP, JU, JW, MELSEC,SYSMAC
Dev. address	Set communication address of CHINO's connecting device	*	0 to 99
Num. of CH *2.	Set the number of reading CH	*	0 to 24
PLC address	Set the PLC address	*	0 to 31
Data address	Select reading start address type of PLC, set the address.	*	When Model is MELSEC D0 to D1023, M0 to M2047 When Model is SYSMAC D0 to D9999, CIO 0 to CIO 6143
Num. of read *3	Set the number of data which PLC is to be read	*	0 to 24

*1 Device name to be displayed on the selection list is omitted.

Displayed List	CHINO's Device
AL/AH	AL4000/AH4000
LT2/3/8	LT230/LT350･370/LT830
LT4	LT450･470
DB	DB1000/DB2000
DP-G	DP1000G
KP	KP1000/KP2000

*2 This instrument assigns data of LT (each series), DB, KP, DP-G, JU, JW as CH data as follow.

CH	LT8	LT2	LT3	LT4	DB	KP	DP-G	JU	JW
01	PV	PV	PV	PV	PV	PV	PV	Voltage Level	Voltage Level (Average)
02	SV	SV	SV	SV	SV	SV	SV	Current Value	Current Value (Average)
03	MV1	MV1	MV1	MV1	MV1	MV1	MV1	Electric Value	Electric Value
04	MV2	MV2	MV2	MV2	MV2	MV2	MV2	Load Resistance Value	-
05	-	Execution SV	Execution SV	Execution SV	Execution SV	Execution SV	Execution SV	-	Voltage Level (between U and V phase)
06	-	EV1	EV1	EV1	EV1	EV1	EV1	-	Current Value (U phase)
07	-	EV2	EV2	EV2	EV2	EV2	EV2	-	Load Resistance Value (U phase)
08	-	-	EV3	EV3	EV3	EV3	EV3	-	Voltage Level (between V and W phase)
09	-	-		EV4	EV4	EV4	EV4	-	Current Value (V phase)
10	-	P	P	P	P	P	P	-	Load Resistance Value (V phase)
11	-	I	I	I	I	I	I	-	Voltage Level (between W and U phase)
12	-	D	D	D	D	D	D	-	Current Value (W phase)
13	-	Execution No.	Execution No.	Execution No.	-	-	-	-	Load Resistance Value (W phase)
14	-	-	-	-	-	-	-	-	Initial Resistance Value (U phase)
15	-	-	-	-	-	-	-	-	Initial Resistance Value (V phase)
16	-	-	-	-	-	-	-	-	Initial Resistance Value (W phase)

*3 For PLC, assign specified start address data as No.1 and after that would be assigned in order.

5) Registration of Display/Record CH

Registration for displaying and recording of read data same as input CH. Assign read data from low order device to the CHNo. by preset calculation or calculation formula. The CH which is not to be assigned by data from low order communication becomes normal input data.

For using preset formula, use read data without alternation.

For using calculation formula, calculation result by other calculation in the calculation formula is to be used.

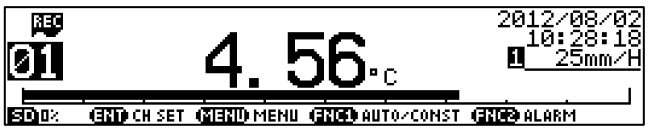

(1) Pressing ENTER key displays the menu window (list of setting items).

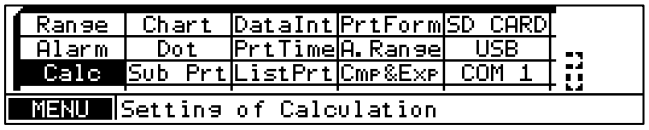

(2) Select “Calc”.

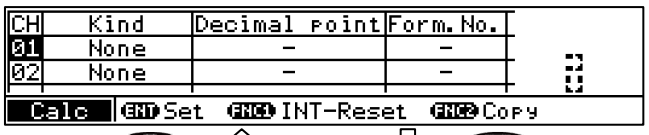

(3) Move the cursor to the channel to set by ▲/▼ key. Press ENTER key to select. The cursor does not move to the parameter except for the CH.

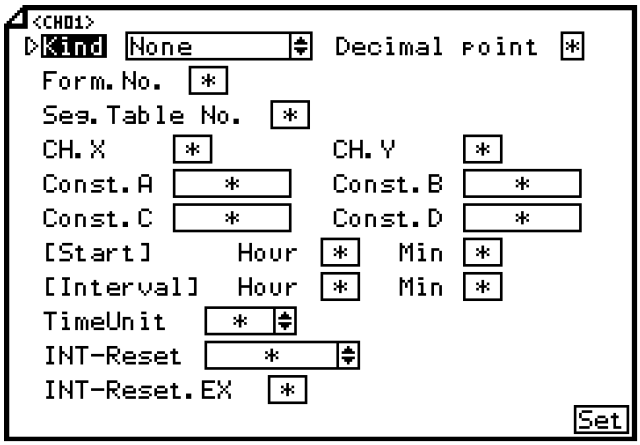

(4) The cursor is on the “Kind”, press ENTER key to make it available for setting and then select “Formula”*, “LowCom”, “LowCom-U16”.

*Setting of calculation formula is necessary additionally.

(5) The cursor moves to the available parameter to set according to the selected calculation type, press ENTER key to make it available for setting and then enter the value.

Note: Actual windows are separated. Use ▲/▼ keys to scroll and continue settings.

(6) After completing the setting of this item, move the cursor to Set.

(7) Press ENTER key to register the settings (when chart recording is ON, a setting change mark is printed). To cancel the settings, press ESC key

[List of Calc setting parameters]
Each setting parameter contents is when set calculation type as “Formula”, “LowCom”, “LowCom-U16”.
Refer to the Instruction Manual [General] “8-4.Calculation Settings ‘Calc’” for other calculation types.

Parameter	Function	Default	Set Value
Kind	Select calculation type.	None	Formula (calculation formula) LowCom (use preset calculation at the low order communication) LowCom-U16 (use preset calculation at the low order communication, 16bits, without sign, process as integer)
Decimal point	Set decimal point position of calculation result.	0	0 to 3
Form.No.	When calculation formula is selected at the calculation type “Kind”, specifies calculation formula No.	-	- (None), 1 to 12
CH.X *1	Specify X data target which is used at preset calculation at the CH. (Set the No. which connecting device is registered)	-	- (None), 1 to 5
CH.Y *2	Specify Y data target which is used at preset calculation at the CH. (Set the CHNo. which is assigned to reading data by connecting device)	-	- (None), 1 to 24
[Start]	Set the start time of the calculation which is used at calculation formula. After the setting, calculation waits until the start time. (at this period, invalid data)	00:00	00:00 to 23:59
[Interval]	Set the calculation interval used at calculation formula.	00:00	00:00 to 24:59

*1 Registered connecting device No. which is set at “Register to the Instrument”(refer to the section 2-3.4)
*2 Refer to the figure *2 at the section 2-3.4

6) Low Order Communication Calculation Formula Setting
Up to 12 formulas which are shared by all channels can be registered using a character string consisting 50 characters at maximum.
Refer to the Instruction Manual [General] “8-5. Formula Settings ‘Formula’” about details.

Calculation formula input method
LCOM (X#Y)
X: No. (1 to 5) which connecting device is registered.
Y: CHNo. which is assigned to reading data by connecting device.

Use LCOMH (X#Y) when treating reading data as 16bits without sign as integer (0 to 65535).

4. Low Order Communication (Write)

1) Overview

Low order communication (write) is a function which this instrument work as a high order device of the communication and write measured/calculation data of this instrument to the PLC connected as low order device.
By setting the communication mode of COM2 port as “High (To DB/KP etc…)”, this function is enabled.

Data writing to the each device is about 1 sec (all points for one device). If 5 devices are connected to the low order side, data update interval is about 5 sec.

Device connectable to low order side
1. MELSEC Series *1
2. SYSMAC Series *2

*1 Data writing to the following PLC by Mitsubishi Electric can be done.

- MELSEC AnACPU Series
- MELSEC QnACPU Series
- MELSEC QnASCPU Series
- MELSEC QCPU Series
- MELSEC FX Series

Communication unit etc. corresponding to communication control procedure model 4 is necessary.
Writeable register as follow

- D0000 to D1023
- M0000 to M2047

*2 Data writing to the following PLC by OMRON can be done.

- Device corresponding to SYSMAC C mode command communication.

Writeable channel as follow

- Data Memory (DM) area : D0000 to D9999
- CIO (input/output relay etc.) area : 0 to 6143

Line converter (CHINO’s model: SC8-10) same number of PLC is necessary for communication with PLC by OMRON.

■ Low order communication (write) specification overview

Number of connectable device	:	Maximum 5 devices
Maximum display points	:	AL4000: 12 points/AH4000: 24 points
Data update interval	:	About 1 sec. for 1 device. * Display update upon this instrument may delay due to the status of data update and communication response delay of low order device.
Communication time out	:	About 1 sec. for the each device (no retry). At this point, previous value is kept for the data (default value is invalid data). * Display “ERR” when the device generated communication time out more than 60 sec. continuously.

2) Register to the Instrument

(1) Press ENTER key to display the menu window (list of setting items).

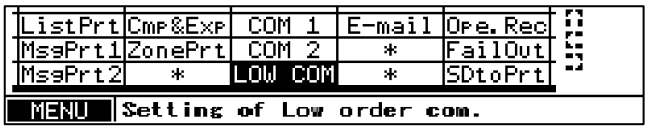

(2) Select “LOW COM”.

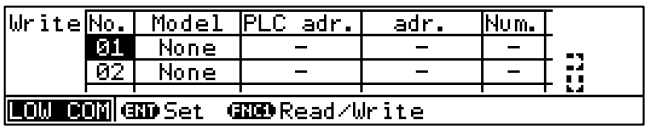

(3) Press FUNC1 key to switch Read/Write.Select Read/Write Select “Write (reading device setting)”. Move the cursor to the No. of registering connecting device by ▲/▼ key and press ENTER key to select. The cursor does not move to the parameter except for the No.

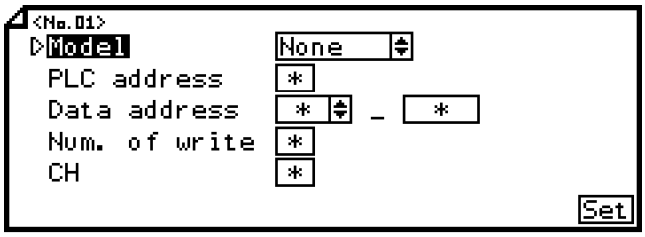

Note: Actual windows are separated. Use ▲/▼ keys to scroll and continue settings.

(4) Move the cursor to the parameter to set by ▲/▼/◀/▶ key.

(5) Press ENTER key to make it available for setting and then select a value or enter a value.

(6) After completing the setting of this item, move the cursor to Set.

(7) Press ENTER key to register the settings (when chart recording is ON, a setting change mark is printed). To cancel the settings, press ESC key.

[List of LOW COM (Write) setting parameters]

Parameter	Function	Default	Set Value
Model	Select device connect as low order.	None	MELSEC,SYSMAC
PLC address	Set the PLC address	*	0 to 31
Data address	Select writing start address type of PLC, set the address.	*	When Model is MELSEC D0 to D1023, M0 to M2047 When Model is SYSMAC D0 to D9999, CIO 0 to CIO 6143
Num. of write	Set the number of data which PLC is writing	*	0 to 24
CH	Start CH which PLC is writing	*	0 to 24

13-8. SD Card Playback “SDtoPrt”

On the chart paper this function executes trace printing of measured data, digital printing such as time and time line etc. by using data file stored in the SD card beforehand. Select the arbitrary file, specify the playback time range and execute recording/printing.
When the chart becomes END during playback, wait until recovery. If the SD card becomes error, recording/printing is force-quitted.

There are two mode in playback. In normal mode, measured data which is corresponded time axis is dotted when chart moves by 0.05mm every time. Matching mode reproduce normal recording.
When playing back by matching mode, SD card recording need to be recorded by “Recording interval: Dot-interval”.

Note 1 **Difference between normal mode and matching mode**

Normal mode
- Measured data which is corresponded time axis is dotted when chart moves by 0.05mm every time. Play back dot interval shorter than normal recording on chart.
- If the chart speed is set to 251mm/H or more, digital recording/printing is executed.

Matching mode
- Real time recording is reproduced because dotting the same timing with data which is dotted during real time recording.
- For playing back by setting of recording, chart speed setting and culling mode setting are not valid.
- If the chart speed is set to 251mm/H or more, digital recording/printing is not executed.

Types of recording/printing as follow

Types	Contents
Measured Value	Execute trace printing by the recording interval stored in the SD card. (Refer to the Instruction Manual [General] “8-20.4 Settings related to measured data save”) If the chart speed is slow, cull dots and record.
Time, Time Line	Same as normal recording, digital print time and time line corresponding interval to the chart speed. (Refer to the Instruction Manual [General] “6-3.2.1) Printing intervals of time and time line”).
Chart Recording Lower/Upper Limit Tag	Same as normal recording, digital print by printing interval of channel number. (Refer to the Instruction Manual [General] “6-3.2.2) Printing interval of channel number”).
Chart Speed	Digital print on the chart paper every 84mm of the chart paper.
Title	Digital print if title character is set.

* Playback is not performed except for the above printing.

Note 2 **Playback enable conditions**

- At chart recording OFF
- At SD card recording OFF
- Without chart END

* When setting chart control at remote contact, need to select REC OFF by using front keys.

Note 3 **Format of playback enable file**

- When using data file which recording format to the SD card is Binary (normal/float)
  *When saving, do not change renewed file position and folder name.
- Playback of the file stored by Text cannot be performed.

Note 4 **How to perform playback by matching mode**

Play back by matching mode when SD card recording is selected the file which is recorded by “Recording interval: dot-interval”.
(The file saved by dot-interval mode is added “SY” before the file name.)
(Refer to “8-20. 4. Settings related to measured data save” of general instruction manual.)
The file saved by other recording interval setting is not played back by matching mode.

1. Playback settings “SDtoPrt”

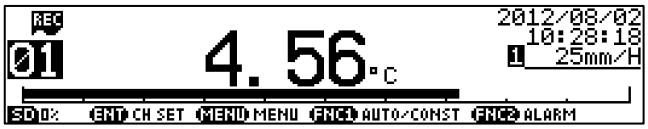

(1) Press ENTER key to display the menu window (list of setting items).

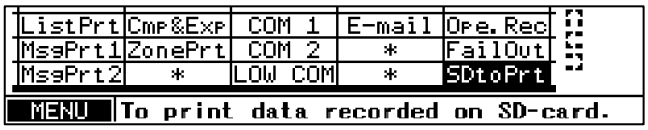

(2) Select “SDtoPrt”.

(3) Press FUNC1 key to display search screen of data file stored in the SD card.

(4) Move the cursor to the year/month/day/hour to search by ▲/▼/◀/▶ key.

(5) Press ENTER key to make it available for setting and then enter a value.

(6) After completing the setting of this item, move the cursor to Set.

(7) Start searching by pressing ENTER key.
Searching is referred to created data and time of data file.
If the data file is not found, “Failed” is displayed and screen is not changed. If the search doesn’t start press the ESC key.

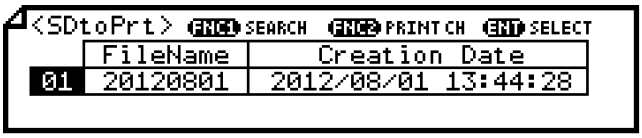

(8) Displays data file in the HR_DATA folder in the order of created date from latest file first. Maximum of 99 files can be displayed.
Press FUNC2 key to display CH which is performed playback ON/OFF switching screen.

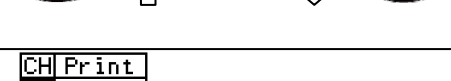

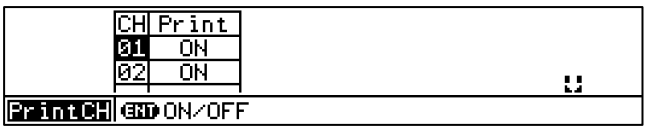

(9) Move the cursor to the CHNo. by ▲/▼ key and by pressing ENTER key, switches ON/OFF of the record.
Press ESC key to return to the data file display screen.

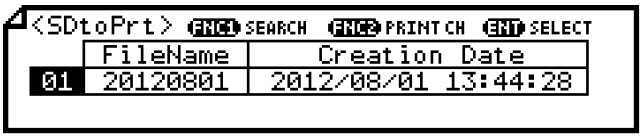

(10) Move the cursor to the file No. of which playback is to be done by ▲/▼ key. Press ENTER key for selecting.

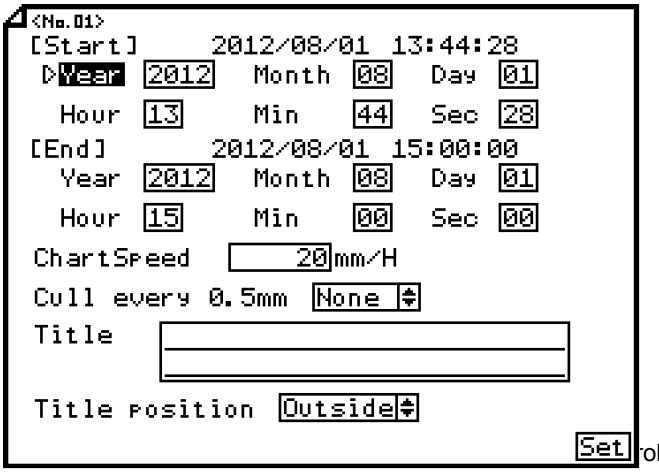

(11) Move the cursor to the parameter to set by ▲/▼/◀/▶ key.

(12) Press ENTER key to make it available for setting and then enter a value.

(13) After completing the setting of this item, move the cursor to Set.

(14) Press ENTER key to display "***Start printing?***" then press ENTER key again. Playback is executed. Press ESC key if not executing the recording.

roll and continue settings.

[List of SDtoPrt setting parameters]

Parameter	Function	Default	Set Value
[Start]	Set the starting date of the playback.	Data storing starting date.	2000,January 1st to 2099,December 31st 00:00:00 to 23:59:59
[End]	Set the end date of the playback.	Data storing end date.	2000,January 1st to 2099,December 31st 00:00:00 to 23:59:59
ChartSpeed	Set the chart speed.	20mm/H	1 to 1500 * Set by 1mm unit, but only 2.5mm/H can be set * Not valid in the matching mode.
Cull every 0.5mm	Set 0.5mm culling mode to execute playback.	None	None, Mode1 (Cull and dot print data of 0.5mm chart movement) Mode2 (Dot print maximum/minimum value of culling data in the order of detection at every 0.25mm of chart movement) * Not valid in the matching mode.
Title	Set the string consisting of up to 40 characters which to print at starting time of the playback.	No registration	
Title position	Select title printing position.	Outside	Outside (Print title before starting of the playback) Inside (Print title synchronized to the playback)

Note 2: If following character strings are included in the title, replace as file name etc. and print.

Setting character strings	Contents of printing character	Number of printing characters
^FN^	File name	8
^CY^	File created year, month, date, hour and minuets	16
^SY^	Printing start year, month, date, hour and minuets	16
^SM^	Printing start month, date, hour and minuets	11
^ST^	Printing start hour and minuets	5
^EY^	Printing end year, month, date, hour and minuets	16
^EM^	Printing end month, date, hour and minuets	11
^ET^	Printing end hour and minuets	5

* If number of the printing character exceeded 40 characters by replacing it, characters after the 41th are not printed.

2. Display screen during excution

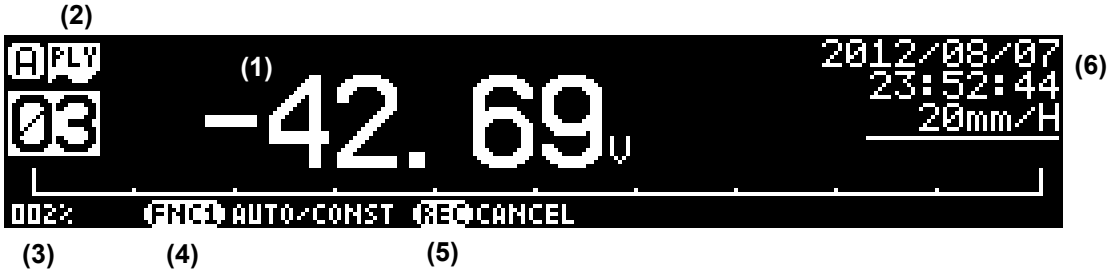

(1) Displays measured data of the playback.

(2) Displays “PLY” on the display during the playback.

(3) Displays progress of the playback.

(4) Fixed display or sequential display is selectable. (Each press of the FUNC1 key switches AUTO: sequential/ CONST: Fixed)

(5) Cancel of the playback can be done by pressing REC key → ENTER key.

(6) Displays year, month, date, and hour of the playback data.

Note **Key operation during printing**

- MENU key and DATAP key are not acceptable during playback.
- Same as normal recording, display switching is available by pressing ▲ key or ▼ key while holding down the ESC key.

14. Specifications

■ Input specifications	
Measurement point	6, 12 and 24
Input type	[DC voltage] ±13.8mV, ±27.6mV, ±69.0mV, ±200mV, ±500mV, ±1V, ±5V, ±10V, ±20V, ±50V [DC current] Supported by additional shunt resistor (100Ω, 250Ω) [Thermocouple] K, E, J, T, R, S, B, N, U, L, W-WRe26, WRe5-WRe26, PtRh40-PtRh20, NiMo-Ni, CR-AuFe, Platinel II, Au/Pt [Resistance thermometer] Pt100, old Pt100, JPt100, Pt50, Pt-Co
Measuring interval	6 points/sec, 12 points/sec, 24 points/2sec
Input resolution	Approx. 1/40000 minimum (converted into reference range)
Input resistance	Thermocouple/DC voltage (±5V or lower range): 6MΩ or higher DC voltage (±10V or higher range): Approx. 1MΩ
Burnout	None/UP/DOWN selected for each input CH for thermocouple and resistance thermometer. These cannot be selected with DC voltage. Maximum time to burnout detection is three times as long as measuring interval.
Allowable signal source resistance	[Thermocouple/DC voltage] Burnout disabled: 1kΩ or lower Burnout enabled: 100Ω or lower [Resistance thermometer] 10Ω or lower per wire, the same resistance for 3 wires
Maximum input voltage	Thermocouple/DC voltage (±5V or lower range): ±10V or lower DC voltage (±10V or higher range): ±60V or lower Resistance thermometer: ±6V or lower
Measuring current	Resistance thermometer: 1mA ±20%
Maximum common mode voltage	30V AC/60V DC
Common mode rejection ratio	130dB or more (50/60Hz)
Series mode rejection ratio	50dB or more (50/60Hz)
Terminal board	Detachable
Accuracy rating	Refer to the tables of measuring range, rated accuracy and display resolution.
Reference junction compensation accuracy	Refer to the table of reference junction compensation accuracy.
Temperature drift	±0.01%FS/℃ Converted into reference electromotive force.
■ Recording specifications	
Recording system	Wire-dot type 6-color ribbon (trace printing and digital recording/printing)
Recording color	Trace printing (default colors)

CH	1, 7 13, 19	2, 8 14, 20	3, 9 15, 21	4, 10 16, 22	5, 11 17, 23	6, 12 18, 24
Color	Red	Black	Blue	Green	Brown	Purple

Digital recording/printing

Periodic data printing	Six colors (red, black, blue, green, brown and purple) repeated
Data printing	Six colors (red, black, blue, green, brown and purple) repeated
Subtract printing	Same as trace printing CH
Fixed time printing	Six colors (red, black, blue, green, brown and purple) repeated
Printing at power-on	Six colors (red, black, blue, green, brown and purple) repeated
Printing at recording start	Six colors (red, black, blue, green, brown and purple) repeated
Alarm printing	Red (activated), green (reset)
List printing	Black, but CH-specific items use the same color as trace printing CH
Message printing	Arbitrary color
Calendar timer printing	Brown
CH No. printing	Same as trace printing CH
Setting change mark	Black
Operation recording	Arbitrary color

Recording interval	Normal: Approx. 5sec/point, Fast: Approx. 3sec/point Synchro: Linked to chart speed
Chart	Fan-fold type (Total width 200mm, total length 20m, recordable width 180mm)
Recording deadband	0.2%
Chart speed	1 to 1500mm/h, in 1mm/h increments 12.5mm/h can be set exceptionally.
Chart fast-feed	Operated by FEED key Feed 0.1mm by one quick press of the key or feed continuously (approx. 600mm/min) by holding down the key.
Display/recording ON/OFF	Select ON/OFF for trace printing to chart, digital printing to chart and recording to SD card for each CH.
Subtract printing	Difference between reference CH value and measured value or between set value and measured value is printed.
Zone printing	2/3/4 divisions
Compressed/ expanded printing	Chart recording lower/upper limit is made non-linear, and specific chart recording lower/upper limit is shrunk or expanded.
Automatic range-shift	Recording range is shifted automatically to another set range when measured value exceeds the current range. Overlap function available
Periodic data printing	Digital printing is added to trace printing at (1) arbitrary intervals or (2) specified time. Printed items: Time, CH No., data and unit (1) Set interval and start time. Interval is limited by chart speed. (2) Set time for printing (24 points maximum)
Data printing	Digital printing is performed when required, interrupting trace printing. Printed items: Time, CH No., data and unit Consecutive requests are limited to a certain number.
Fixed time printing	Date, time and time line, scale (ZERO/SPAN), CH No. & tag, and unit can be printed in conjunction with the chart speed. Year/month/date is printed instead of month/date when printed at every midnight. Tag is printed at the set time only.
Printing at power-on	Date and time are printed at power-on.
Printing at recording start	Date and time are printed at recording start (recording OFF → ON).
Alarm printing	Alarm activation time, CH No., alarm type and level are printed at alarm activation. Reset time, CH No., hyphen and alarm level are printed at alarm reset. Up to 48 data can be memorized.
List printing	List printing is performed when required, interrupting trace printing. (1) "List 1": Major setting information Date, time, CH setting, recording setting and alarm setting (2) "List 2": Additional setting information Date, time, additional setting and optional setting (3) "List 3": List 1 + List 2 Date, time, List 1 + List 2 (4) Others Printing can be stopped. Consecutive requests are limited to a certain number.
Message printing	Printing is performed when required. Trace printing can be continued/interrupted. Linking to alarm activation/reset possible. One message consists of up to 15 characters (alphabets, numbers, katakana, symbols, etc.). Up to 20 types can be registered. Consecutive requests are limited to a certain number.
Calendar timer printing	Printing is performed with calendar timer ON and printing enabled. Trace printing is continued. Printed items: Date, time, calendar timer No. and message One message consists of up to 15 characters (alphabets, numbers, katakana, symbols, etc.), shared by message printing
Channel number printing	Channel number is printed in conjunction with the chart speed.
Setting change mark	Δ is printed on the right side of chart when setting change occurs.
Operation recording	Remote contact ON/OFF status is recorded with straight line to specified area. Specified area: Within the range of 0 to 90% Up to 20 types can be recorded. * Only for the unit using remote contact and enabling operation recording.
Chart illumination	White LED ON/OFF/AUTO (turn OFF after 3-minute unused period)
Chart end detection	Notified on the operation window. Front REC: LED blinking Automatic recording stop (the rest operated normally)

■ Indication/display specifications	
Digital display	Full dot monochrome LCD 264 x 48 dots Display area 184 x 22mm White LED backlight (turned off after 3-minute unused period when selecting AUTO) Channel number: 2 digits Data display: 5 digits (+/- and decimal point excluded)
Analog indication	180mm LCD bar graph
Analog indication deadband	Undefined (no analog indication)
Status LED	(1) REC: Green LED OFF: Recording stopped Flash: Detection of chart end ON: Recording (2) CARD: Green LED OFF: No card inserted Flash: Card being accessed ON: Card inserted (3) ALM: Red LED OFF: All alarm OFF Flash: Any alarm ON
Operation/set keys	FUNC1: Function switch 1 FUNC2: Function switch 2 ENTER: Register settings MENU: Display settings ESC: Cancel settings ▲: Forward ▼: Reverse ◀: Move left ▶: Move right REC: Recording start/stop FEED: Chart fast feed DATAP: Data print
Front engineering port	Mini-USB port
■ General specifications	
Rated power voltage	General specification: 100 to 240V AC
Rated power frequency	General specification: 50/60Hz
Power consumption	General specification: MAX 65VA 100V AC balanced: 22VA 240V AC balanced: 31VA
Memory protection	Set contents maintained by nonvolatile RAM. Clock data maintained by lithium battery. (Data saved for more than 10 years with 8-hour or more operation per day.) (Alarm message displayed when battery level drops.)
Clock accuracy	±2 minutes in 30 days (under reference operating condition, error caused by power ON/OFF excluded)
Insulation resistance	Primary terminal – protective conductor terminal: 20MΩ or more (500V DC) Secondary terminal – protective conductor terminal: 20MΩ or more (500V DC) Primary terminal – secondary terminal: 20MΩ or more (500V DC) * Primary terminal: General power terminal (100 to 240V), alarm output terminal of mechanical relay “a” and mechanical relay “c” Secondary terminal: All terminals other than primary and protective conductor terminals
Withstand voltage	Primary terminal – protective conductor terminal: 1500V AC (one minute) Secondary terminal – protective conductor terminal: 500V AC (one minute) Primary terminal – secondary terminal: 1500V AC (one minute) * Primary terminal: General power terminal (100 to 240V), alarm output terminal of mechanical relay “a” and mechanical relay “c” Secondary terminal: All terminals other than primary and protective conductor terminals
Exterior material	[Front] Door: Aluminum die-casting (ADC12) Glass: Soda glass [Rear] Case: Cold-rolled steel plate (SPCC)
Exterior color	[Front] Door: Black (equivalent of Munsell N3.0) Glass: Clear and colorless [Rear] Case: Gray (equivalent of Munsell N7.0)
Dimensions	288H x 288W x 195D (216D with the alarm output/remote contact unit or communication unit) * D indicates the panel depth.
Terminal screw	Power terminal: M4.0 Protective conductor terminal: M4.0 Measuring input terminal: M3.5 Alarm output terminal: M3.5 Remote contact terminal: M3.5 Communications terminal: M3.0
Weight	Approx. 7.6kg (with full options)
Mounting	Panel mounting Mounting brackets attached to the right and left sides
Panel cutout size	281 x 281
CE marking	EN61326-1 EN61010-1 EN61010-2-030 * Under EMC test condition, variation in indication value may be ±20% or ±2mV at maximum, whichever is larger.
UL	UL61010-1
c-UL	CAN/CSA C22.2 No.61010-1
Environmental consideration	RoHS compliant EU new battery directive compliant PFOS compliant CHINO’s environmentally-conscious design compliant
Packing material	Environmentally-friendly materials used
■ Reference operating condition	
Ambient temperature	23°C ±2°C
Ambient humidity	55%RH ±10% (non-condensing)
Power voltage	General specification: 100V AC ±1%
Power frequency	General specification: 50/60Hz ±0.5%
Mounting posture	Back and forth ±0°, left and right ±0°
Mounting condition	Single panel mounting (space required around)
Altitude	2000m maximum
Vibration	0 m/s^2
Impact	0 m/s^2
Wind	None
External noise	None
Warm-up time	30 minutes minimum
■ Normal operating condition	
Ambient temperature	0 to 50°C (20 to 65%RH, non-condensing)
Ambient humidity	20 to 80%RH, non-condensing (5 to 45°C)
Power voltage	General specification: 100 to 240V AC ±10%
Power frequency	General specification: 50/60Hz ±2%
Mounting posture	Forward tilt 0°, backward tilt 0 to 30°, left and right 0 to 10°
Mounting condition	Single panel mounting (space required above and below)
Altitude	2000m maximum
Vibration	0m/s^2 (10 to 60Hz)
Impact	0m/s^2
Wind	None
External noise	None
Temperature variation	10°C/h maximum
■ Transportation condition	
Ambient temperature and humidity	-10 to 60°C 5 to 90%RH (non-condensing)
Vibration	4.9m/s^2 maximum (10 to 60Hz)
Impact	392m/s^2 maximum
* These conditions are set assuming that the unit is packed in a similar way to that at shipment.	
■ Storage condition	
Ambient temperature and humidity	-10 to 40°C, 5 to 90%RH (non-condensing) 40 to 60°C, 5 to 65%RH (non-condensing) (10 to 30°C for a long-term storage)
Vibration	0m/s^2 (10 to 60Hz)
Impact	0m/s^2
* These conditions are set assuming that the unit is packed in a similar way to that at shipment. Re-adjustment may be required.	

■ Measuring range, rated accuracy and display resolution

Input type		Measuring range	Reference range	Display resolution	Rated accuracy	Exception
DC voltage	DC (mV)	-13.80 to 13.80mV	±13.8mV	10μV	±0.1%FS ±1digit	
		-27.60 to 27.60mV	±27.6mV	10μV		
		-69.00 to 69.00mV	±69.0mV	10μV		
		-200.0 to 200.0mV	±200mV	100μV		
		-500.0 to 500.0mV	±500mV	100μV		
	DC (V)	-1.00 to 1.00V	±1V	10mV	±0.1%FS ±1digit	
		-5.00 to 5.00V	±5V	10mV		
		-10.00 to 10.00V	±10V	10mV		
		-20.00 to 20.00V	±20V	10mV		
		-50.00 to 50.00V	±50V	10mV		
Thermocouple	K	-200.0 to 300.0°C	±13.8mV	0.1°C	±0.1%FS ±1digit	-200 to 0°C: ±0.2%FS ±1digit or equivalent of 70μV, whichever is larger
		-200.0 to 600.0°C	±27.6mV	0.1°C		
		-200 to 1370°C	±69.0mV	1°C		
	E	-200.0 to 200.0°C	±13.8mV	0.1°C	±0.1%FS ±1digit	-200 to 0°C: ±0.2%FS ±1digit or equivalent of 70μV, whichever is larger
		-200.0 to 350.0°C	±27.6mV	0.1°C		
		-200 to 900°C	±69.0mV	1°C		
	J	-200.0 to 250.0°C	±13.8mV	0.1°C	±0.1%FS ±1digit	-200 to 0°C: ±0.2%FS ±1digit or equivalent of 70μV, whichever is larger
		-200.0 to 500.0°C	±27.6mV	0.1°C		
		-200 to 1200°C	±69.0mV	1°C		
	T	-200.0 to 250.0°C	±13.8mV	0.1°C	±0.1%FS ±1digit	-200 to 0°C: ±0.2%FS ±1digit
		-200.0 to 400.0°C	±27.6mV	0.1°C		
	R	0 to 1200°C	±13.8mV	1°C	±0.1%FS ±1digit	0 to 400°C: ±0.2%FS ±1digit
		0 to 1760°C	±27.6mV	1°C		
	S	0 to 1300°C	±13.8mV	1°C	±0.1%FS ±1digit	0 to 400°C: ±0.2%FS ±1digit
		0 to 1760°C	±27.6mV	1°C		
	B	0 to 1820°C	±13.8mV	1°C	±0.1%FS ±1digit	0 to 400°C: undefined 400 to 800°C: ±0.2%FS ±1digit
	N	-200.0 to 400.0°C	±13.8mV	0.1°C	±0.1%FS ±1digit	-200 to 0°C: ±0.2%FS ±1digit or equivalent of 70μV, whichever is larger
		-200.0 to 750.0°C	±27.6mV	0.1°C		
		-200 to 1300°C	±69.0mV	1°C		
	U	-200.0 to 250.0°C	±13.8mV	0.1°C	±0.1%FS ±1digit	-200 to 0°C: ±0.2%FS ±1digit or equivalent of 70μV, whichever is larger
		-200.0 to 500.0°C	±27.6mV	0.1°C		
		-200.0 to 600.0°C	±69.0mV	0.1°C		
	L	-200.0 to 250.0°C	±13.8mV	0.1°C	±0.1%FS ±1digit	-200 to 0°C: ±0.2%FS ±1digit or equivalent of 70μV, whichever is larger
		-200.0 to 500.0°C	±27.6mV	0.1°C		
		-200 to 900°C	±69.0mV	1°C		
	W-WRe26	0 to 2315°C	±69.0mV	1°C	±0.15%FS ±1digit	0 to 400°C: ±0.3%FS ±1digit
	WRe5-WRe26	0 to 2315°C	±69.0mV	1°C	±0.2%FS ±1digit	
	NiMo-Ni	0.0 to 290.0°C	±13.8mV	0.1°C	±0.2%FS ±1digit	
		0.0 to 600.0°C	±27.6mV	0.1°C		
		0 to 1310°C	±69.0mV	1°C		
	Platinel II	0.0 to 350.0°C	±13.8mV	0.1°C	±0.15%FS ±1digit	
		0.0 to 650.0°C	±27.6mV	0.1°C		
		0 to 1390°C	±69.0mV	1°C		
	PtRh40-PtRh20	0 to 1880°C	±13.8mV	1°C	±0.2%FS ±1digit	0 to 400°C: ±1.5%FS ±1digit 400 to 800°C: ±0.8%FS ±1digit
	CR-AuFe	0.0 to 280.0K	±6.9mV	0.1K	±0.2%FS ±1digit	0 to 20K: ±0.5%FS ±1digit 20 to 50K: ±0.3%FS ±1digit
	Au/Pt	0.0 to 1000.0°C	±27.6mV	0.1°C	±0.2%FS ±1digit	

Input type		Measuring range	Reference range	Display resolution	Rated accuracy	Exception
Resistance thermometer	Pt100	-140.0 to 150.0°C	160Ω	0.1°C	±0.1%FS ±1digit	
		-200.0 to 300.0°C	220Ω	0.1°C		
		-200.0 to 649.0°C	340Ω	0.1°C		
		-200.0 to 850.0°C	400Ω	0.1°C		
	Old Pt100	-140.0 to 150.0°C	160Ω	0.1°C	±0.1%FS ±1digit	
		-200.0 to 300.0°C	220Ω	0.1°C		
		-200.0 to 649.0°C	340Ω	0.1°C		
	JPt100	-140.0 to 150.0°C	160Ω	0.1°C	±0.1%FS ±1digit	
		-200.0 to 300.0°C	220Ω	0.1°C		
		-200.0 to 649.0°C	340Ω	0.1°C		
	Pt50	-200.0 to 649.0°C	220Ω	0.1°C	±0.1%FS ±1digit	
	Pt-Co	4.0 to 374.0K	220Ω	0.1K	±0.15%FS ±1digit	4 to 20K: ±0.5%FS ±1digit 20 to 50K: ±0.3%FS ±1digit

* Measuring range conversion accuracy under reference operating condition.
Reference junction compensation accuracy is added for thermocouple input.

* Under EMC test condition, variation in indication value may be ±20% or ±2mV at maximum, whichever is larger.

K, E, J, T, R, S, B, N: IEC584 (1977 and 1982), JIS C 1602-1995, JIS C 1605-1995
W-WRe26, NiMo-Ni, Platinel II, PtRh40-PtRh20, CR-AuFe, Au/Pt: ASTM E1751
WRe5-WRe26: ASTM E988
U, L: DIN43710-1985
Pt100: IEC751 (1995), JIS C 1604-1997
Old Pt100: IEC751 (1983), JIS C 1604-1989, JIS C 1606-1989
JPt100: JIS C 1604-1981, JIS C 1606-1986
Pt50: JIS C 1604-1981
Pt-Co: CHINO

■ Reference junction compensation accuracy

Input type	Reference junction compensation accuracy	
	Ambient temperature: 23°C±10°C	Ambient humidity: range except for description on the left
K, E, J, T, N Platinel II	±0.5°C or equivalent of 20μV, whichever is larger.	±0.1°C or equivalent of 40μV, whichever is larger.
Except for above description	±1.0°C or equivalent of 40μV, whichever is larger.	±2.0°C or equivalent of 80μV, whichever is larger.

CHINO

CHINO CORPORATION

32-8, KUMANO-CHO, ITABASHI-KU, TOKYO 173-8632

Telephone: 81-3-3956-2171
Facsimile: 81-3-3956-0915

Printed in Japan